Item # _____

Job _____

POLYMER UTILITY CART: myCart Series™

- **User-Friendly:** Ergonomic handle and additional legroom puts more distance between the shelves and you. You can push the cart more freely without hitting your shins and feet against the cart.
- **Convenient:** The utility tray is roomy enough to store every day objects. It offers 2x the amount of space than traditional utility carts; which allows for objects to fit in comfortably.
- **Personalized:** Each cart comes with two labels for easy identification.
- **Ultimate Cleanability:** Smooth polymer shelf surfaces with contoured edges are designed to resist staining and wipe clean easily.
- **Corrosion-Proof Shelves:** All-polymer shelves will never corrode.
- **Sturdy Construction:** Impact resistant shelves are designed to withstand daily abuse.

  Weight capacities evenly distributed:

  — MY1627 and MY2030 models: 150lbs. (68kg) per shelf, not to exceed 300lb (136kg) on a 2-shelf cart and 400 lb. (181kg) on a 3-shelf cart.

  — MY2636 Models: 200lbs. (90kg) per shelf, not to exceed 400 lb. (181kg) on a 2-shelf cart and 500 lbs. (227kg) on a 3-shelf cart.

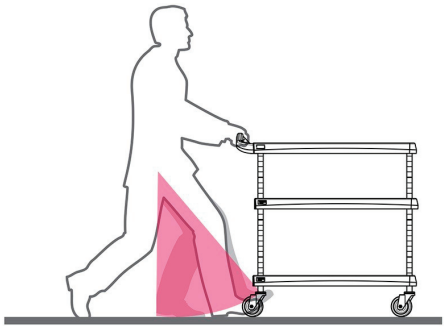

- **Contains Spills:** 7/16" (11mm) ship's edge retains small spills and prevents items from sliding off during transport.
- Specific Models with Microban® product protection: The blue MyCart has built in Microban product protection. This inhibits the growth of bacteria, mold, mildew, and fungi that cause odors, stains, and product degradation.
- **Attractive Aesthetics** allow for use in a variety of applications.
- **2-tier and 3-tier models available**
- **Easy-to-Adjust:** Optional center shelf adjusts on 1" (25mm) increments.
- **Easy, No-Tool Assembly:** Ships knocked down.
- **myCart Series™ is NSF listed** NSF

Blue	Black	Gray	Purple

Microban antimicrobial product protection *Microban® antimicrobial protection inhibits the growth of stain and odor-causing bacteria on Starsys, keeping the surface areas "cleaner between cleanings."

InterMetro Industries Corporation
North Washington Street
Wilkes-Barre, PA 18705
www.metro.com

Short Form Specs — Base Models:

- Cart, Utility, consisting of at least 2 high-density polyethylene, injection-molded shelves and 4 chrome-plated posts. Handle shelf will have an integrated utility tray with a base width of 1.8-2.2" (46-56mm) and coved corners. Flat shelf will have a built in 3" (76mm) cutaway. All shelves will have a built-in $^{7}/_{16}$" (11mm) deep ship's edge around the perimeter. 2-shelf cart design is such that user may add an intermediate shelf if deemed necessary that adjusts on 1" (25mm) increments. Cart will include two nominal 4.625" L x .88" H (117.475 x 22.352mm) labels for easy identification.
- 1627 and 2030 models: Roll on four 4" (102mm) diameter thermoplastic, mark-resistant swivel/stem casters.
- 2636 models: Roll on four 5" (127mm) diameter thermoplastic, mark-resistant swivel/stem casters.

Construction:

- Continuous Usage Temperature: -20/120°F (-29/49°C)
- Carts are not intended for cart wash applications
- Casters
  4" (102mm) swivel caster: Thermoplastic, non-marking gray tread. Plated horn and axle.
  Replacement part: RPBC4M-4, bag of four.
  5" (127mm) swivel caster: Resilient rubber material, plated horn and axle.
  Replacement part: 5M, sold individually.

Configurations:

- 2-tier and 3-tier models
- MY1627 and MY2030 Base Model Specs: Chrome posts, 4" (102mm) non-marking swivel casters.
- MY2636 Base Model Specs: Chrome posts, 5" (127mm) swivel resilient rubber casters

Model No. Gray	Model No. Black	Model No. Blue with Antimicrobial	Actual Width/Length/Height Including the Handle (in.)	(mm)	Description	Posts	Load Rating per Cart (lbs.)	(kg)	Approx. Pkd. Wt. (lbs.)	(kg)
MY1627-24G	MY1627-24BL	MY1627-24BU	$18^{5}/_{16}$x$31^{1}/_{2}$x$35^{1}/_{2}$	465.2x800.1x901.7	2-shelf base model	chrome-plated	300	136	28.5	12.93
MY1627-34G	MY1627-34BL	MY1627-34BU	$18^{5}/_{16}$x$31^{1}/_{2}$x$35^{1}/_{2}$	465.2x800.1x901.7	3-shelf base model	chrome-plated	400	181	34	15.42
MY2030-24G	MY2030-24BL	MY2030-24BU	$23^{7}/_{16}$x$34^{3}/_{8}$x$35^{1}/_{2}$	595.3x873.3x901.7	2-shelf base model	chrome-plated	300	136	33	14.97
MY2030-34G	MY2030-34BL	MY2030-34BU	$23^{7}/_{16}$x$34^{3}/_{8}$x$35^{1}/_{2}$	595.3x873.3x901.7	3-shelf base model	chrome-plated	400	181	41.5	18.82
MY2636-25G	MY2636-25BL	MY2636-25BU	$27^{11}/_{16}$x$40^{1}/_{4}$x$36^{7}/_{8}$	703.3x1022.4x936.6	2-shelf base model	chrome-plated	400	181	40	18.14
MY2636-35G	MY2636-35BL	MY2636-35BU	$27^{11}/_{16}$x$40^{1}/_{4}$x$36^{7}/_{8}$	703.3x1022.4x936.6	3-shelf base model	chrome-plated	500	227	51	23.13

New! Purple myCart:

Model No. Purple	Actual Width/Length/Height Including the Handle (in.)	(mm)	Description	Posts	Load Rating per Cart (lbs.)	(kg)	Approx. Pkd. Wt. (lbs.)	(kg)
MY2030-24AP	$23^{7}/_{16}$x$34^{3}/_{8}$x$35^{1}/_{2}$	595.3x873.3x901.7	2-shelf base model	chrome-plated	300	136	33	14.9
MY2030-34AP	$23^{7}/_{16}$x$34^{3}/_{8}$x$35^{1}/_{2}$	595.3x873.3x901.7	3-shelf base model	chrome-plated	400	181	41.5	18.8

POLYMER UTILITY CART: myCart Series™

Dimensions:

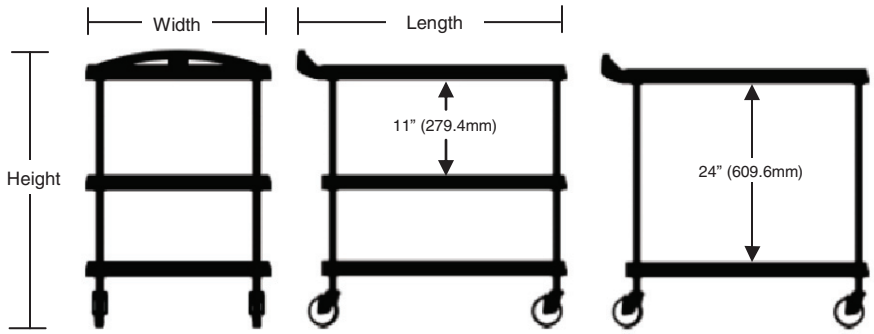

MY1627

- Easy-grip handle and utility tray
- Small footprint for tight spaces
- Accommodates Metro tote boxes and ISO totes

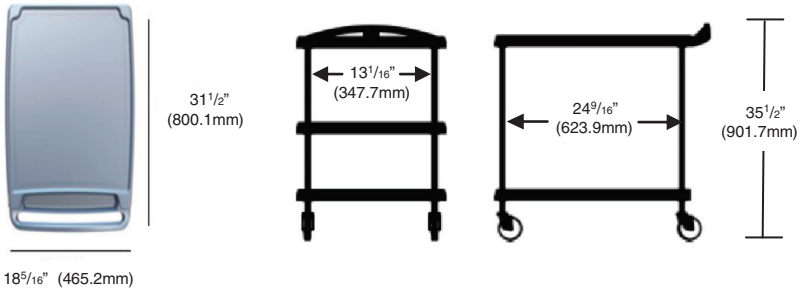

MY2030

- Cart handle has built-in recessed support channels to manage odd shaped items
- Sized for standard racks
  (1) Glass/dish rack
  (2) milk crates
  (2) bus box [on top shelf
  (1) bus box + (1) silverware tote [on mid/bottom shelf]

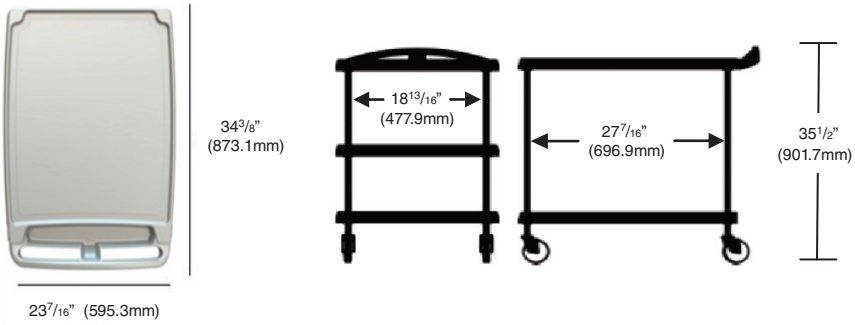

MY2636

- Top shelf can accommodate:
  (2) nominal 18 x 26"
  (457 x 660mm) polycarbonate totes side by side
  (2) Metro totes measuring 17 1/2 x 22 1/2"
  (445 x 571mm)
  side by side
- Cart handle has built in slot to hold scanners

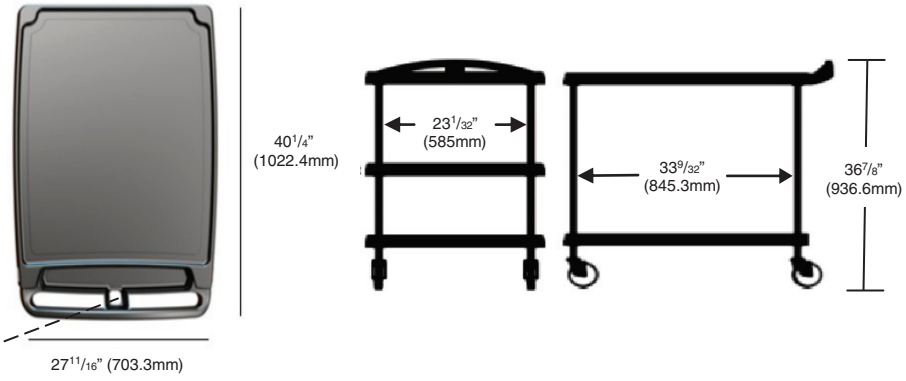

Job _____

POLYMER UTILITY CART: myCart Series™

Accessories:

Waste Basket

Utility Bin

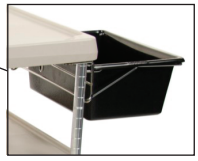

Specifications:
Bin — ABS Thermoplastic
Wastebasket — Polyethylene

Model No.	Description	Fits Cart	Width/Height/Depth (in.)	(mm)	Approx. Pkd. Wt. (lbs.)	(kg)
MYWB1	Wastebasket (including holder)	MY1627	17 7/8 x 16 1/4 x 14 3/4	454 x 413 x 375	5.7	2.5
MYWB2	Wastebasket (including holder)	MY2030	23 x 16 1/4 x 14 3/4	584 x 413 x 375	5.8	2.6
MF222	Wastebasket Only	MY1627, MY230	14 3/8 x 15 3/8 x 10 3/8	365 x 391 x 264	2.8	1.3
MYUB1	Utility Bin (including holder)	MY1627	17 7/8 x 7 x 15 1/4	454 x 178 x 387	5	2.2
MYUB2	Utility Bin (including holder)	MY2030	23 x 7 x 15 1/4	584 x 178 x 387	5.1	2.3
UB1	Utility Bin Only	MY1627, MY230	16 3/8 x 6 x 11	416 x 152 x 279	2	0.9

Personalization Label

Constructed of polyester material with a clear polyester flap to protect written information from wiping off.

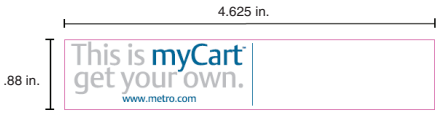

Model No.	Description	Length/Height (in.)	(mm)
MYCARTLBL-10PK	Pack of 10 Personalized Labels	4 3/5 x 7/8	117.5 x 22.4

All Metro Catalog Sheets are available on our website: **www.metro.com**

InterMetro Industries Corporation
North Washington Street, Wilkes-Barre, PA 18705
Phone: 570-825-2741
Product Information. U.S. and Canada: 1.800.992.1776
Outside U.S. and Canada: www.metro.com/contactus

Printed in U.S.A Rev. 4/15

Information and specifications are subject to change without notice. Please confirm at time of order

Copyright © 2015 InterMetro Industries Corp.