ADVANCE TABCO®
SMART FABRICATION™

STAINLESS STEEL

POLY-TOP WORK TABLES

Item #: _____ ***Qty #:*** _____

Model #: _____

Project #: _____

SPT SERIES

TSPT SERIES

SPS SERIES

TSPS SERIES

Die-formed FLUSH TABS
Virtually self-cleaning
and indestructible

LEG GUSSETS welded into
a box-design structure...
guarantees rigidity

FEATURES:

Flat **Poly-Vance©** working surface with welded stainless steel angle frame and die-formed flush tabs.

Front to back Stretchers are welded to legs. Left to right Stretcher bolted to legs and requires assembly.

Cutting board does not exceed 50 lbs. (or larger than 36" x 36" as required for NSF approval.)

Aluminum die cast "Leg to shelf" clamp secures shelf to Leg eliminating unsightly nuts and bolts.

Undershelf is adjustable.

CONSTRUCTION:

All TIG welded. Exposed areas mechanically polished to a satin finish.

Leg gussets welded into a box-design structure for added rigidity.

Roll formed embossed galvanized hat channels are secured to top by means of structural adhesive and weld studs.

MATERIAL:

FRAME is 12 gauge stainless steel type "304" series.
Support members all stainless steel.

LEGS are 1 5/8" dia. tubular 16 gauge type "304" series stainless steel with stainless steel gussets and 1" adjustable stainless bullet feet.

SPLASH on SPS and TSPS Series is 14 gauge type "304" series stainless steel.

TOP is thick reversible **Poly-Vance©** cutting surface. SPS series 18 gauge undershelf.

SPT SERIES
POLY-TOP WITH S/S UNDERSHELF

LENGTH	24" Wide	30" Wide	Wt.
48"	SPT-244	SPT-304	77 lbs.
60"	SPT-245	SPT-305	69 lbs.
72"	SPT-246	SPT-306	117 lbs.
84"	SPT-247	SPT-307	130 lbs.
96"	SPT-248	SPT-308	141 lbs.
108"	SPT-249	SPT-309	180 lbs.
120"	SPT-2410	SPT-3010	201 lbs.

TSPT SERIES
POLY-TOP WITH TUBULAR BASE

LENGTH	24" Wide	30" Wide	Wt.
48"	TSPT-244	TSPT-304	77 lbs.
60"	TSPT-245	TSPT-305	69 lbs.
72"	TSPT-246	TSPT-306	117 lbs.
84"	TSPT-247	TSPT-307	130 lbs.
96"	TSPT-248	TSPT-308	141 lbs.
108"	TSPT-249	TSPT-309	180 lbs.
120"	TSPT-2410	TSPT-3010	201 lbs.

SPS SERIES
6" BACKSPLASH WITH S/S UNDERSHELF

LENGTH	24" Wide	30" Wide	Wt.
48"	SPS-244	SPS-304	85 lbs.
60"	SPS-245	SPS-305	100 lbs.
72"	SPS-246	SPS-306	130 lbs.
84"	SPS-247	SPS-307	145 lbs.
96"	SPS-248	SPS-308	160 lbs.
108"	SPS-249	SPS-309	180 lbs.
120"	SPS-2410	SPS-3010	220 lbs.

TSPS SERIES
6" BACKSPLASH WITH TUBULAR BASE

LENGTH	24" Wide	30" Wide	Wt.
48"	TSPS-244	TSPS-304	85 lbs.
60"	TSPS-245	TSPS-305	100 lbs.
72"	TSPS-246	TSPS-306	130 lbs.
84"	TSPS-247	TSPS-307	145 lbs.
96"	TSPS-248	TSPS-308	160 lbs.
108"	TSPS-249	TSPS-309	180 lbs.
120"	TSPS-2410	TSPS-3010	220 lbs.

DETAILS and SPECIFICATIONS

TOL ± .500” Units 8 ft. & larger are furnished with six (6) legs. ALL DIMENSIONS ARE TYPICAL

SPT SERIES POLY-TOP WITH S/S UNDER-SHELF

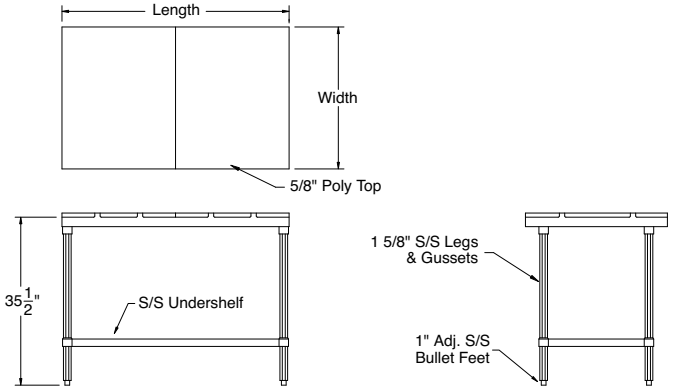

TSPT SERIES POLY-TOP WITH TUBULAR BASE

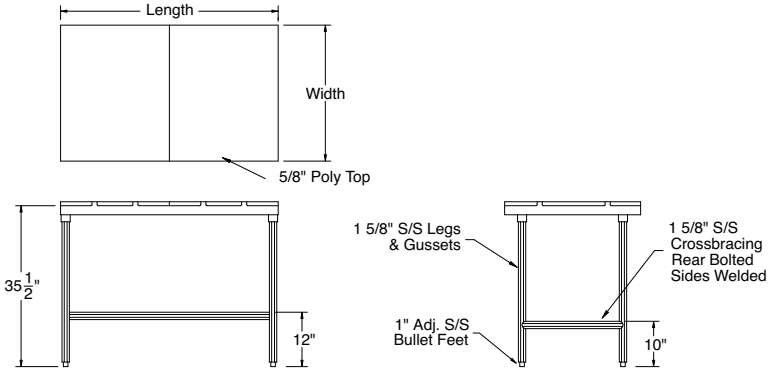

SPS SERIES 6” BACKSPLASH WITH S/S UNDERSHELF

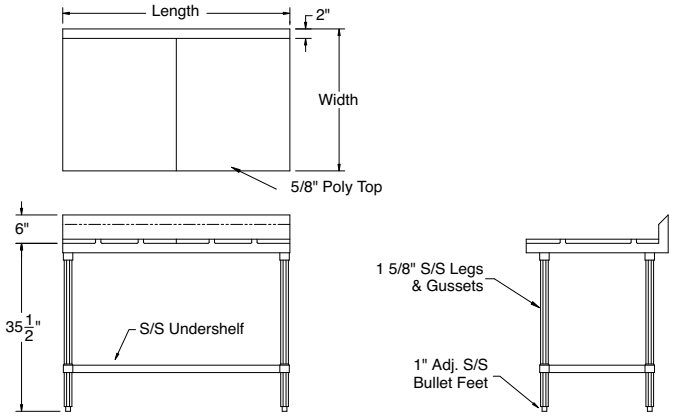

TSPS SERIES 6” BACKSPLASH WITH TUBULAR BASE

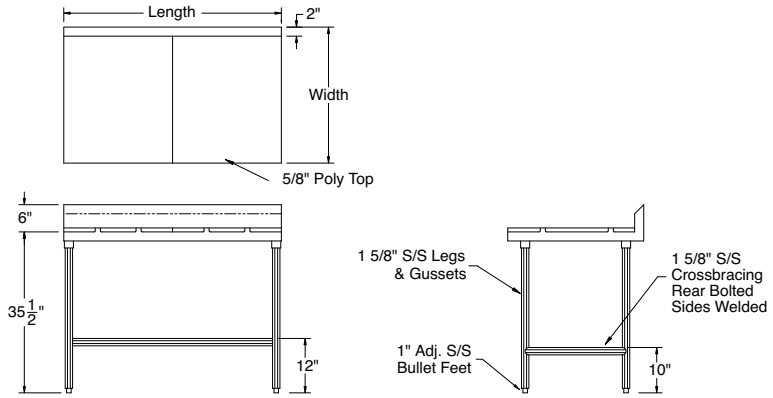

ADVANCE TABCO®
SMART FABRICATION™

ADVANCE TABCO is constantly engaged in a program of improving our products. Therefore, we reserve the right to change specifications without prior notice.

200 Heartland Boulevard, Edgewood, NY 11717-8380
© ADVANCE TABCO, OCTOBER 2012