Hot Rod® Flat Surface Roller Grill

Models: ☐ HR-20 ☐ HR-31 ☐ HR-50 ☐ HRS-20 ☐ HRS-31 ☐ HRS-50

PRODUCT: QUANTITY: ITEM#:

Designed Smart.

Equipment Packages to fit your operations

- Available in a variety of sizes to fit your counter space:
  - Compact HR(S)-20 (11 rollers and 13" cooking surface across)
  - Regular size HR(S)-31 (11 rollers and 19 1/2" cooking surface across)
  - Full Menu sizes HR(S)-50 (11 rollers and 30 1/2" cooking surface across), and HR(S)-85 (18 rollers and 34" across)
- Available in Chrome or New "Tru-Turn" textured rollers.
- Unit is designed to be used in a "clerk served" operation or in a customer "self-serve" merchandising plan. For counters between clerk and customer, the Flat Roller Grill is available with reversible "rear controls" and a "pass-through" sneeze guard.

Designed to deliver great tasting Hot Dogs

- Roller Grill heats quickly and has a fast recovery for unexpected surges in demand.
- Heating system has two cooking zones that can be turned to Grilling temperatures for cooking Hot Dogs in less than 4 minutes* and turned down to NSF-safe holding temperatures for serving customers.
- HR(S)-20 flat Equipment can grill 340 Hot Dogs per hour.
- HR(S)-31 flat Equipment can grill 510 Hot Dogs per hour.
- HR(S)-50 flat Equipment can grill 850 Hot Dogs per hour.

*Grill times based on Pre-heated roller grill (about 10 minutes warm up cycle).

Easy to Operate and Maintain

- "Easy to read" graphics and heavy duty knobs on the control panel make it easier for employees to operate at the correct temperatures.
- Infinite Control system gives operator the maximum ability to adjust temperatures to a variety of hot dogs, sausage, egg roll, or other roll type products.
- Roller Grill is designed to require minimal labor:
  - New "Tru-Turn" coated rollers just wipe clean with damp rag.
  - Raised rollers allow cleaning in "hard to reach" areas.
  - Removable grease collection pan is simple to clean.
- Easiest Roller Grill in the industry to service:
  - Unit is supplied with "easy to remove" side and bottom panels.
  - Dependable, high torque motor is one of the most dependable in the industry.
  - Warranty includes on-site repairs, reducing the amount of potential down time.

Built Solid.

Built for Long Life!

- Exterior cabinet is constructed of stainless steel for maximum durability.
- Made with heavy duty wiring.
- "Tru-Turn" coating is 30% thicker than competitive non-stick coatings.
- Teflon seals at end of rollers stop grease from migrating into motors and chains.

Reliability Backed By APW Wyott's Warranty

- APW Wyott's Hot Rod Roller Equipment is backed by a 1 year limited warranty and a one year on-site labor warranty
- Certified by the following agencies:

MODEL HR-50 ROLLER GRILL

APW Wyott Supporting Products

- BW-20, BW-31, BW-50
- BW-50 holds up to 100 Hot Dog Buns
- Evenly distributes heat and moisture

- BC-20, BC-31, BC-50
- "Fresh Grilled" merchandising signs
- Ideal for "self-serve" operations

Options:

- 4" Metal Leg Kit
- 6" Tongs
- Polycarbonate Sneeze Guards
- Reversible controls (Add "R" to model type)
- Pass through Sneeze Guards

See reverse side for product specifications.

APW Wyott Foodservice Equipment Company

729 Third Avenue • Dallas, TX 75226 • 800-527-2100 • 1-214-421-7366 • Fax 1-214-565-0976

For more information e-mail us at: Info@APWwyott.com

Rev. 1/1/2003

Hot Rod® Flat Surface Roller Grill

Models: ☐ HR-20 ☐ HR-31 ☐ HR-50 ☐ HRS-20 ☐ HRS-31 ☐ HRS-50

PRODUCT: QUANTITY: ITEM#:

Flat Surface Roller Grill

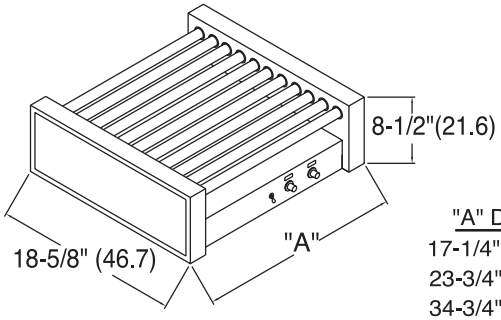

"A" DIMENSION
17-1/4" (43.8) HR(S)-20
23-3/4" (60.3) HR(S)-31
34-3/4" (88.3) HR(S)-50

6 FT. CORD (182.9)
(CENTIMETERS IN PARENTHESIS)

Polycarbonate Sneeze Guards (SG)

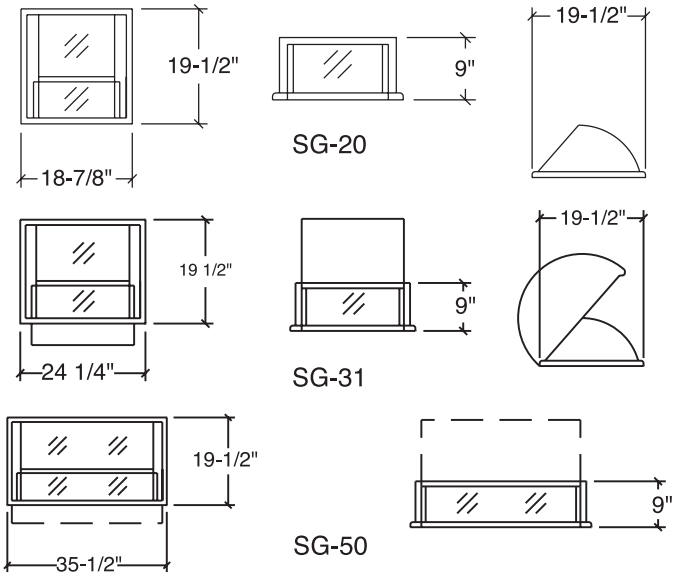

Pass Thru Sneeze Guards

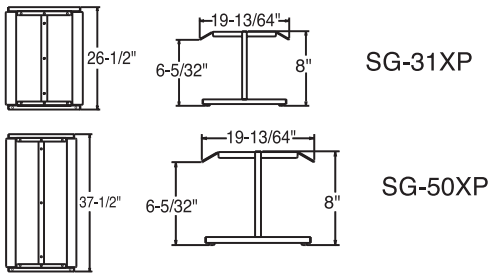

Hot Rod® Flat Surface Roller Grill & Sneeze Guards

PRODUCT SPECIFICATIONS

Construction:

Stainless steel exterior, aluminum drip pan and coated steel bottom. Chrome or "Tru-Turn" textured non-stick rollers (specify Model HRS-20, -31 or -50 for "Tru-Turn"). Heavy-duty high torque motor.

Electrical Specifications:

HR(S)-20: 120V, 768W. 6.4Amps, 60Hz
HR(S)-31: 120V, 985W, 8.3Amps, 60Hz
208/240V, 885/1160W, 3.2/4.8Amps
220V, 990W, 4.5Amps
HR(S)-50: 120V, 1320W, 11Amps, 60Hz
208/240V, 1260/1665W, 6.2/7Amps

All 120V units use a NEMA 5-15P plug that exits from the bottom on the left rear corner.

Overall Dimensions:

HR(S)-20: 8-1/2" H x 17-1/4" W x 18-5/8" D
(21.6 cm x 43.8 cm x 47.3 cm)
HR(S)-31: 8-1/2" H x 23-3/4" W x 18-5/8" D
(21.6 cm x 60.3 cm x 47.3 cm)
HR(S)-50: 8-1/2" H x 34-3/4" W x 18-5/8" D
(21.6 cm x 88.3 cm x 47.3 cm)

Note: 7/16" space between rollers

Ship Weight:

HR(S)-20: 35 lbs. (15.9 kg)
HR(S)-31: 42 lbs. (19.1 kg)
HR(S)-50: 55 lbs. (25 kg)
F.O.B. / Cheyenne, WY

Sneeze Guard Specifications:

Overall Dimensions:

SG-20: 9" H x 18-7/8" W x 19-1/2" D
(22.9 cm x 47.9 cm x 49.5 cm)
SG-31: 9" H x 24-1/4" W x 19-1/2" D
(22.9 cm x 62 cm x 49.5 cm)
SG-31XP: 8" H x 26-1/2" W x 19-13/64" D
(20.2 cm x 67 cm x 48.6 cm)
SG-50: 9" H x 35-1/2" W x 19-1/2" D
(22.9 cm x 90.2 cm x 49.5 cm)
SG-50XP: 8" H x 37-1/2" W x 19-13/64" D
(20.2 cm x 94.9 cm x 48.6 cm)

Ship Weight:

SG-20: 7 lbs. (2.7 kg)
SG-31: 9 lbs. (4 kg)
SG-50: 15 lbs. (6.3 kg)
SG-31XP: 15 lbs. (6.3 kg)
SG-50XP: 20 lbs. (9 kg)
F.O.B. / Cheyenne, WY

APW Wyott Foodservice Equipment Company

729 Third Avenue • Dallas, TX 75226 • 800-527-2100 •1-214-421-7366 • Fax 1-214-565-0976

For more information e-mail us at: Info@APWwyott.com

Rev. 1/1/2003 #1602