DELFIELD®

Project _____

Item _____

Quantity _____

CSI Section 11400

Approved _____

Date _____

18600PTBMP

Self-Contained Refrigerated Pizza Prep Tables

Models

- 18648PTBMP 48" Raised Rail Pizza Table, 6 1/3 pan capacity
- 18660PTBMP 60" Raised Rail Pizza Table, 7 1/3 pan capacity
- 18672PTBMP 72" Raised Rail Pizza Table, 9 1/3 pan capacity
- 18691PTBMP 91" Raised Rail Pizza Table, 11 1/3 pan capacity
- 18699PTBMP 99" Raised Rail Pizza Table, 12 1/3 pan capacity
- 186114PTBMP 114" Raised Rail Pizza Table, 14 1/3 pan capacity

18691PTBMP

Standard Features

- Top, sides and ends are constructed of 18-gauge stainless steel
- Units are mechanically cooled with diestamped openings to accommodate 12" x 20" hotel pans or fractional pans
- Pans and adapter bars by others
- Pans are recessed 2" to provide proper cooling for NSF 7
- High density environmentally friendly, Kyoto Protocol Compliant, Non ODP (Ozone Depletion Potential), Non GWP (Global Warming Potential) polyurethane foam throughout unit
- Dart style quick change gaskets
- Stainless steel removable hinged covers
- On/off switch and rail on/off is located behind the louver
- Front louver provides access and air flow to the condensing unit
- 8' long electrical cord
- Environmentally friendly R290 refrigerant
- Three year parts and labor warranty and an additional two year compressor parts warranty
- Electronic temperature control

Options & Accessories

- Stainless steel back
- Laminate facing (full front)
- Laminate end
- Laminate back
- Tray racks
- Cutting board (.5" x 20")
- Legs, set of four or six
- Cheese grates with removable catch pans
- 18" deep single tier stainless steel overshelf
- 19", 27" or 32" wide refrigerated drawers (2) high, holds 6" deep pans
- 19", 27" or 32" wide refrigerated drawers (3) high, holds 4" deep pans
- Lock
- 4" casters
- 6" legs
- Additional shelf (specify door size)
- Celsius readout for electronic control
- Fan assist package for rail

Specifications

Exterior Top: Constructed of one-piece 18-gauge stainless steel, with integral 2.12" (5cm) high square nosing at the front. Top has a mechanically cooled refrigerated raised rail at the rear with openings to accommodate pans (provided by others). Rail interior is 22-gauge stainless steel. Raised rail openings have 18-gauge stainless steel removable lids. Unit is equipped with separate expansion valve and on/off switch for refrigerated rail. Temperature in top openings maintains 33°F (1°C) to 41°F (5°C) with pans recessed 2" (5cm) at 86°F ambient room temperature, meeting NSF 7 requirements.

Exterior Back and Bottom: 24-gauge galvanized steel. Exterior ends are finished with stainless steel.

Base Interior: Stainless steel back and bottom. Base interior sides and door frames are thermoformed ABS plastic. Each interior door section has (1) 25" (64cm) deep removable epoxy coated wire shelf. Base is insulated with 2" (5cm) high density foamed in place environmentally friendly, Kyoto Protocol Compliant, Non ODP (Ozone Depletion Potential), Non GWP (Global Warming Potential) polyurethane. End of base has a machine compartment with condensing unit installed.

Door(s): 22-gauge stainless steel exterior front, with a thermoformed ABS plastic interior liner.

Refrigeration System: R290 refrigerant, and maintains 36˚F (2˚C) to 40˚F (4˚C) interior cabinet temperature. Interior cabinet is cooled with mullion style blower coils (coated) with expansion valves mounted between each door/drawer section for even air and temperature control.

Electronic temperature controls and pre-wired condensing unit with hot gas condensate evaporator are installed in the machine compartment. Electronic control for base reads air temperature. Electronic control for rail displays temperature for set point purposes only. Display does not reflect air or product temps in unit. On/Off switches for rail and base are located behind the louvered panel.

Electrical Connections: 115 volt, 60 Hertz, single phase.

Unit is wired with 3-wire, grounded, maximum 8' (2.4m) cord and plug.

Casters: Equipment is mounted on 5" (13cm) diameter casters; overall height of casters is 6.13" (16cm).

R290

980 S. Isabella Rd.
Mt. Pleasant, Michigan 48858

Phone: 800-733-8948 or 989-773-7981
Fax: 800-669-0619

www.delfield.com

WELBILT®

18600PTBMP

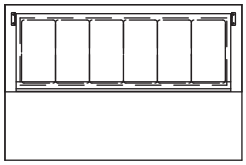

18648PTBMP

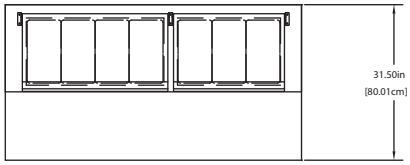

18660PTBMP

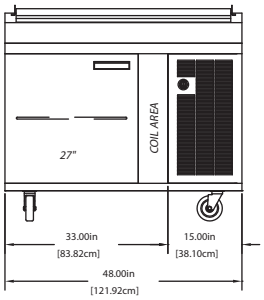

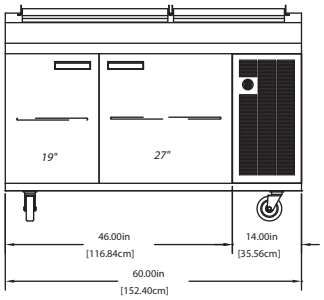

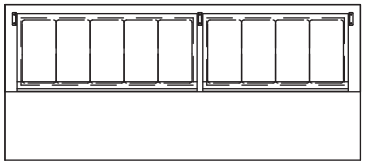

18672PTBMP

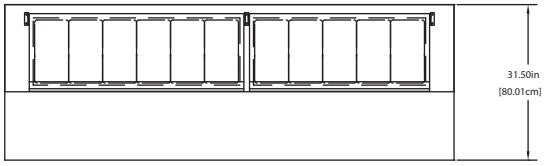

18691PTBMP

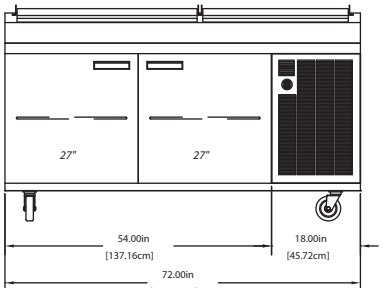

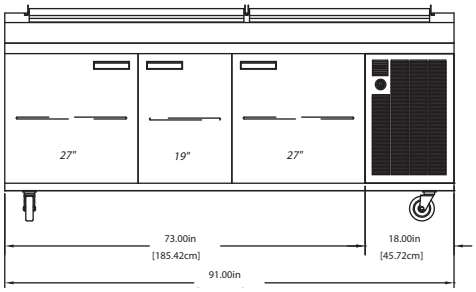

Welbilt reserves the right to make changes to the design or specifications without prior notice.

980 S. Isabella Rd.
Mt. Pleasant, Michigan 48858

Phone: 800-733-8948 or 989-773-7981
Fax: 800-669-0619

www.delfield.com

18600PTBMP

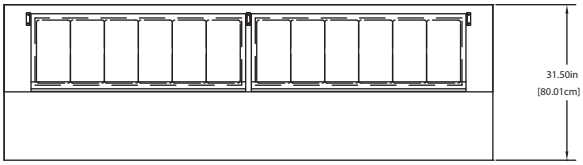

18699PTBMP

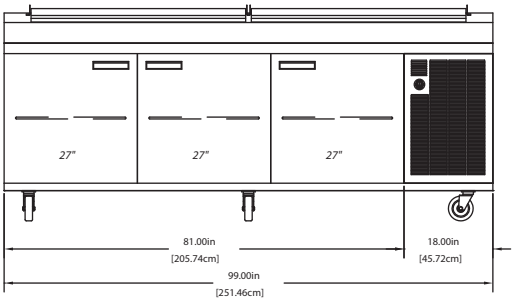

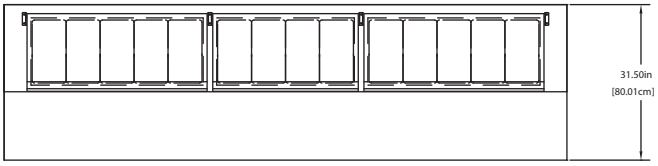

186114PTBMP

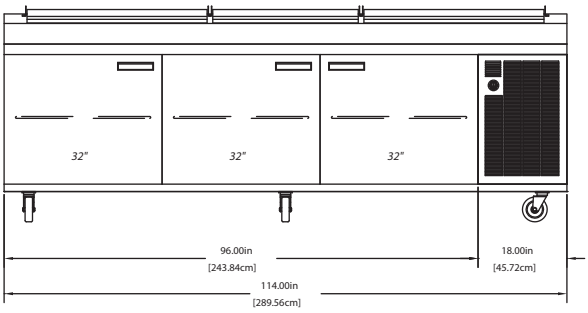

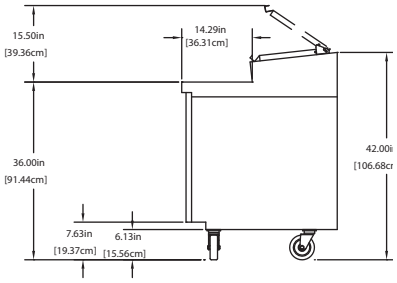

TYPICAL END

Welbilt reserves the right to make changes to the design or specifications without prior notice.

980 S. Isabella Rd.
Mt. Pleasant, Michigan 48858

Phone: 800-733-8948 or 989-773-7981
Fax: 800-669-0619

www.delfield.com

DELFIELD®

Self-Contained Refrigerated Pizza Prep Tables

18600PTBMP

Mechanical Data

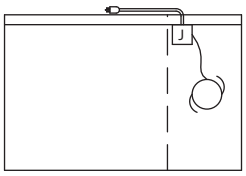

= CONDENSING UNIT WIRED TO J-BOX, J-BOX WIRED TO ON/OFF SWITCH

Door Swing

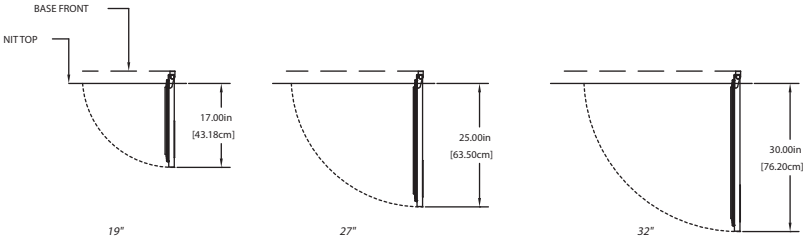

18600PTBMP

Specifications

Model	Pan Capacity (1/3)	# of Shelves	Shelf Area	Volume	BTU Load Base/Rail	BTU Sys. Cap Base/Rail	H.P.	V/Hz/Ph	Amps	Nema Plug	Ship Weight
18648PTBMP	6	1	3.95	9.36	356/253	2128/1037	0.25	115/60/1	4.7	5-15P	520lbs/236kg
18660PTBMP	7	2	6.51	13.81	421/354	2128/1230	0.25	115/60/1	4.7	5-15P	575lbs/260kg
18672PTBMP	9	2	7.9	16.52	367/476	1648/1158	(2) 0.20	115/60/1	6.5	5-15P	635lbs/288kg
18691PTBMP	11	3	10.29	22.35	531/608	1705/1199	(2) 0.20	115/60/1	6.5	5-15P	770lbs/349kg
18699PTBMP	12	3	11.85	25.07	561/658	1922/1336	(2) 0.20	115/60/1	6.5	5-15P	805lbs/365kg
186114PTBMP	14	3	14.46	30.16	616/750	1922/1405	(2) 0.20	115/60/1	6.5	5-15P	927lbs/420kg

Welbilt reserves the right to make changes to the design or specifications without prior notice.

980 S. Isabella Rd.
Mt. Pleasant, Michigan 48858

Phone: 800-733-8948 or 989-773-7981
Fax: 800-669-0619

Printed in the U.S.A.
5910D_DEL_18PTBMP
02/18

WELBILT®