ITEM#

GLO-RAY® PIZZA WARMERS

Models GRPWS-2418D, -3618D, -4818D, -2424D, -3624D, -4824D GRPWS-2418T, -3618T, -4818T, -2424T, -3624T, -4824T GRPWS-2418Q, -3618Q, -4818Q, -2424Q, -3624Q, -4824Q

Hatco has the perfect food warmer for holding boxed or bagged pizzas with the Glo-Ray Pizza Warmer.

FLEXIBILITY

The Hatco Glo-Ray GRPWS series allows the operator to keep pizza hot and fresh for convenient self-serve or quick-serve areas. These warmers are available in dual, triple, or quadruple shelf models with varying widths of 24", 36", and 48" (610, 914, and 1219 mm), and in depths of 18" or 24" (457 or 610 mm)

All models are constructed of aluminum and stainless steel with tempered glass side panels; and feature slanted, heated, hardcoated aluminum shelves with stainless steel box stops for easy pass-through holding, and 4" (102 mm) legs.

Each heat zone has a separate on-off switch and temperature control to accommodate a variety of pizzas. Bright annealed lamp reflectors with incandescent display lights illuminate the holding areas and emphasize product.

QUALITY

The following features assure the finest performance for years to come:

- All models have thermostatically-controlled base heat to maintain optimum serving temperatures.
- A separate on-off switch and temperature control for each heat zone allows for the holding of a variety of pizzas.
- Available in dual, triple, and quadruple shelves with various widths and depths.
- Coated shatter-resistant incandescent lights enhance product display while safe-guarding food products from bulb breakage.

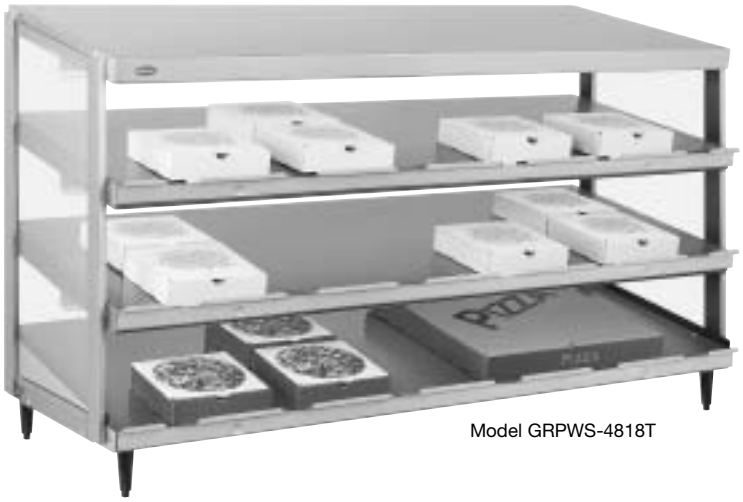

Model GRPWS-4818T

Model GRPWS-2418Q

BLANKET ELEMENTS GUARANTEED AGAINST BURNOUT AND BREAKAGE FOR ONE YEAR.

HATCO CORPORATION P.O. Box 340500 Milwaukee, WI 53234-0500 U.S.A.
(800) 558-0607 • (414) 671-6350 • Fax (800) 543-7521 • Int'l. Fax (414) 671-3976
www.hatcocorp.com • E-mail: equipsales@hatcocorp.com

Form No. GRPWS-1006(S) Printed in U.S.A.

ITEM#

GLO-RAY® PIZZA WARMERS

Models GRPWS-2418D, -3618D, -4818D, -2424D, -3624D, -4824D GRPWS-2418T, -3618T, -4818T, -2424T, -3624T, -4824T GRPWS-2418Q, -3618Q, -4818Q, -2424Q, -3624Q, -4824Q

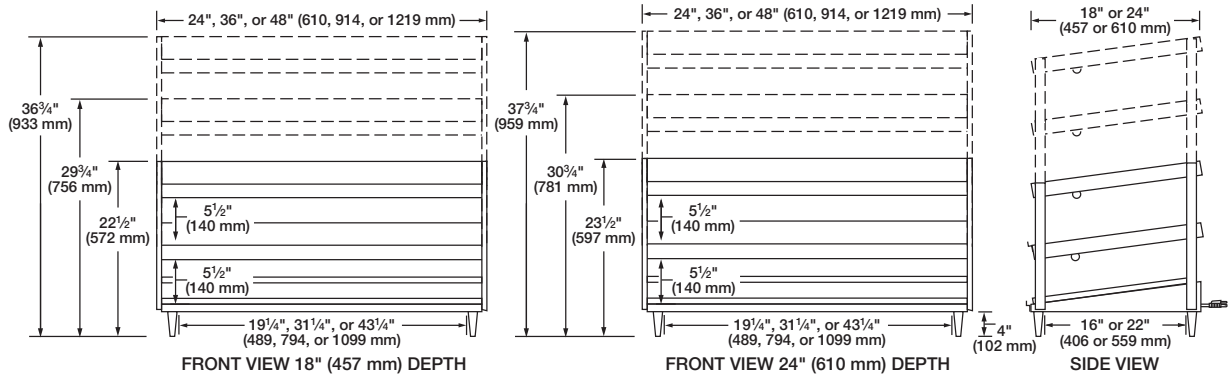

SPECIFICATIONS

Dual Shelf Models – 18" (457 mm) Depth & 22½" (572 mm) Height

Model	Width	Watts	Amps*	Shipping Weight
GRPWS-2418D	24" (610 mm)	750	6.3	76 lbs. (35 kg)
GRPWS-3618D	36" (914 mm)	1068	8.9	106 lbs. (48 kg)
GRPWS-4818D	48" (1219 mm)	1370	11.4	136 lbs. (62 kg)

Dual Shelf Models – 24" (610 mm) Depth & 23½" (597 mm) Height

Model	Width	Watts	Amps*	Shipping Weight
GRPWS-2424D	24" (610 mm)	950	7.9	96 lbs. (44 kg)
GRPWS-3624D	36" (914 mm)	1342	11.2	136 lbs. (62 kg)
GRPWS-4824D	48" (1219 mm)	1716	14.3	177 lbs. (80 kg)

Triple Shelf Models – 18" (457 mm) Depth & 29¾" (756 mm) Height

Model	Width	Watts	Amps*	Shipping Weight
GRPWS-2418T	24" (610 mm)	1125	9.4	98 lbs. (45 kg)
GRPWS-3618T	36" (914 mm)	1602	13.4	136 lbs. (62 kg)
GRPWS-4818T	48" (1219 mm)	2055•	11.4†	175 lbs. (80 kg)

Triple Shelf Models – 24" (610 mm) Depth & 30¾" (781 mm) Height

Model	Width	Watts	Amps*	Shipping Weight
GRPWS-2424T	24" (610 mm)	1425	11.9	123 lbs. (56 kg)
GRPWS-3624T	36" (914 mm)	2013•	16.8	175 lbs. (80 kg)
GRPWS-4824T	48" (1219 mm)	2574	14.3†	227 lbs. (103 kg)

Quadruple Shelf Models – 18" (457 mm) Depth & 36¾" (933 mm) Height

Model	Width	Watts	Amps*	Shipping Weight
GRPWS-2418Q	24" (610 mm)	1500	12.5	119 lbs. (54 kg)
GRPWS-3618Q	36" (914 mm)	2136•	17.8	167 lbs. (76 kg)
GRPWS-4818Q	48" (1219 mm)	2740	11.4†	214 lbs. (97 kg)

Quadruple Shelf Models – 24" (610 mm) Depth & 37¾" (959 mm) Height

Model	Width	Watts	Amps*	Shipping Weight
GRPWS-2424Q	24" (610 mm)	1900•	15.8	151 lbs. (69 kg)
GRPWS-3624Q	36" (914 mm)	2684	11.2†	214 lbs. (97 kg)
GRPWS-4824Q	48" (1219 mm)	3432	14.3†	277 lbs. (126 kg)

* Based on 120 volts.
• 120 volt models come with 20 amp cord sets.
† Based on 120/208, volts 120/240 volts.

DIMENSIONS

Dual Shelf Models –
24", 36", or 48"W x 18" or 24"D x 22½" or 23½"H w/legs (610, 914, or 1219 x 457 or 610 x 572 or 597 mm).

Triple Shelf Models –
24", 36", or 48"W x 18" or 24"D x 29¾" or 30¾"H w/legs (610, 914, or 1219 x 457 or 610 x 756 or 781 mm).

Quadruple Shelf Models –
24", 36", or 48"W x 18" or 24"D x 36¾" or 37¾"H w/legs (610, 914, or 1219 x 457 or 610 x 933 or 959 mm).

VOLTAGE

Dual Shelf Models: 120 volts, single phase (uses NEMA 5-15P, except GRPWS-4824D for Canada uses NEMA 5-20P).

Triple Shelf Models GRPWS-2418T, -2424T: 120 volts, single phase (uses NEMA 5-15P).

GRPWS-3618T: 120 volts, single phase (uses NEMA 5-15P, Canada uses NEMA 5-20P).

GRPWS-4818T, -3624T: 120 volts, single phase (uses NEMA 5-20P, Canadian models available in 120/208 or 120/240 volts uses NEMA L14-20P).

GRPWS-4824T: 120/208 or 120/240 volts, single phase (uses NEMA L14-20P).

Quadruple Shelf Models GRPWS-2418Q: 120 volts, single phase (uses NEMA 5-15P, Canada uses NEMA 5-20P).

GRPWS-3618Q: 120 volts, single phase (uses NEMA 5-20P, Canadian models available in 120/208 or 120/240 volts uses NEMA L14-20P).

GRPWS-2424Q: 120 volts, single phase (uses NEMA 5-20P).

GRPWS-4818Q, -3624Q, -4824Q: 120/208 or 120/240 volts, single phase (uses NEMA L14-20P).

Export voltages available, consult factory.

CORD LOCATION

Control side at right base side.

PLUG CONFIGURATIONS

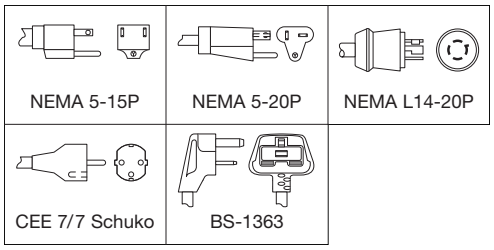

OPTIONS (NOT FOR RETROFIT)

❑ *Designer* Colors: Warm Red, Black, Gray Granite, White Granite, Navy Blue, Hunter Green

❑ Halogen Bulbs in lieu of Standard Display Lights

PRODUCT SPECS

Pizza Warmer

The Pizza Warmer shall be a Glo-Ray® Model ....rated at ....volts and ....watts, as manufactured by the Hatco Corporation, Milwaukee, WI 53234 U.S.A.

The warmer shall have ....heated shelves, tempered glass sides, hardcoated shelves with box stops, incandescent display lights, and 4" (102 mm) legs. It shall include a temperature control and on-off switch for each heat zone. A factory-attached 6' (1829 mm) cord with plug shall be attached.

HATCO CORPORATION P.O. Box 340500 Milwaukee, WI 53234-0500 U.S.A. • (800) 558-0607 • (414) 671-6350
Fax (800) 543-7521 • Int'l. Fax (414) 671-3976 • www.hatcocorp.com • E-mail: equipsales@hatcocorp.com

Form No. GRPWS-1006(S)

Printed in U.S.A.