T&S BRASS AND BRONZE WORKS, INC.

2 Saddleback Cove / P.O. Box 1088
Travelers Rest, SC 29690

Travelers Rest, SC: 800-476-4103 • Simi Valley, CA: 800-423-0150 • Fax: 864-834-3518 • www.tsbrass.com

Model No.

B-0133-01

Item No.

This Space for Architect/Engineer Approval

Job Name_____Date_____

Model Specified_____ Quantity_____

Customer/Wholesaler_____

Contractor_____

Architect/Engineer_____

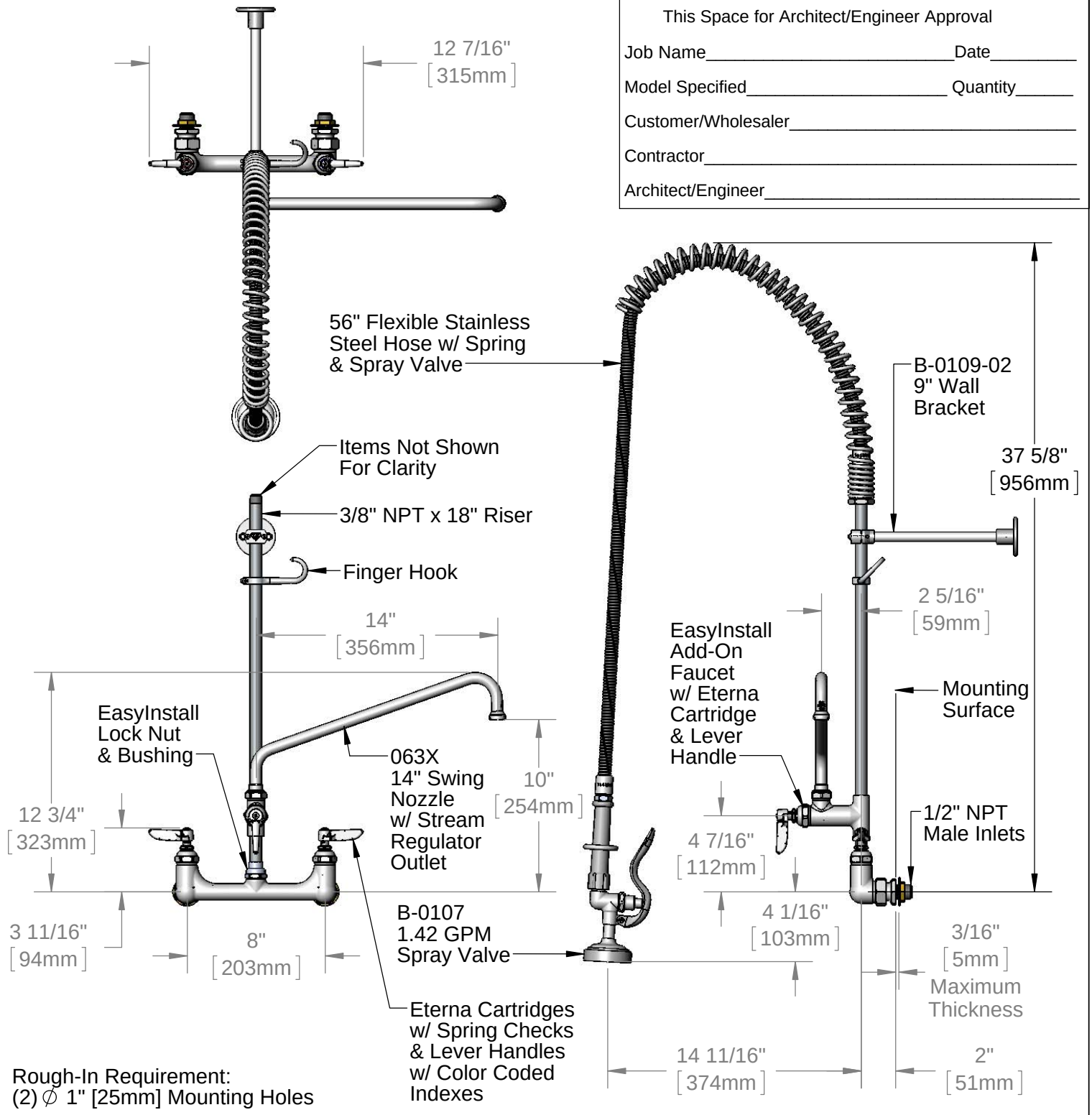

Rough-In Requirement:
(2) ∅ 1" [25mm] Mounting Holes

Product Specifications:

Pre-Rinse Unit: EasyInstall 8" Wall Mount Mixing Faucet, Eterna Cartridges w/ Spring Checks, Lever Handles, Add-On Faucet, 14" Swing Nozzle, 56" Flexible Stainless Steel Hose, 1.42 GPM Spray Valve, 9" Wall Bracket & 1/2" NPT Male Inlets

Product Compliance:

ASME A112.18.1 / CSA B125.1
NSF 61 - Section 9
NSF 372 (Low Lead Content)
EPAct 2005 (PRSV)

Drawn: KJG	Checked: JRM	Approved: JHB	Date: 03/14/14	Scale: 1:8	Sheet: 1 of 2

T&S BRASS AND BRONZE WORKS, INC.

2 Saddleback Cove / P.O. Box 1088
Travelers Rest, SC 29690

Travelers Rest, SC: 800-476-4103 • Simi Valley, CA: 800-423-0150 • Fax: 864-834-3518 • www.tsbrass.com

Model No.

B-0133-01

Item No.

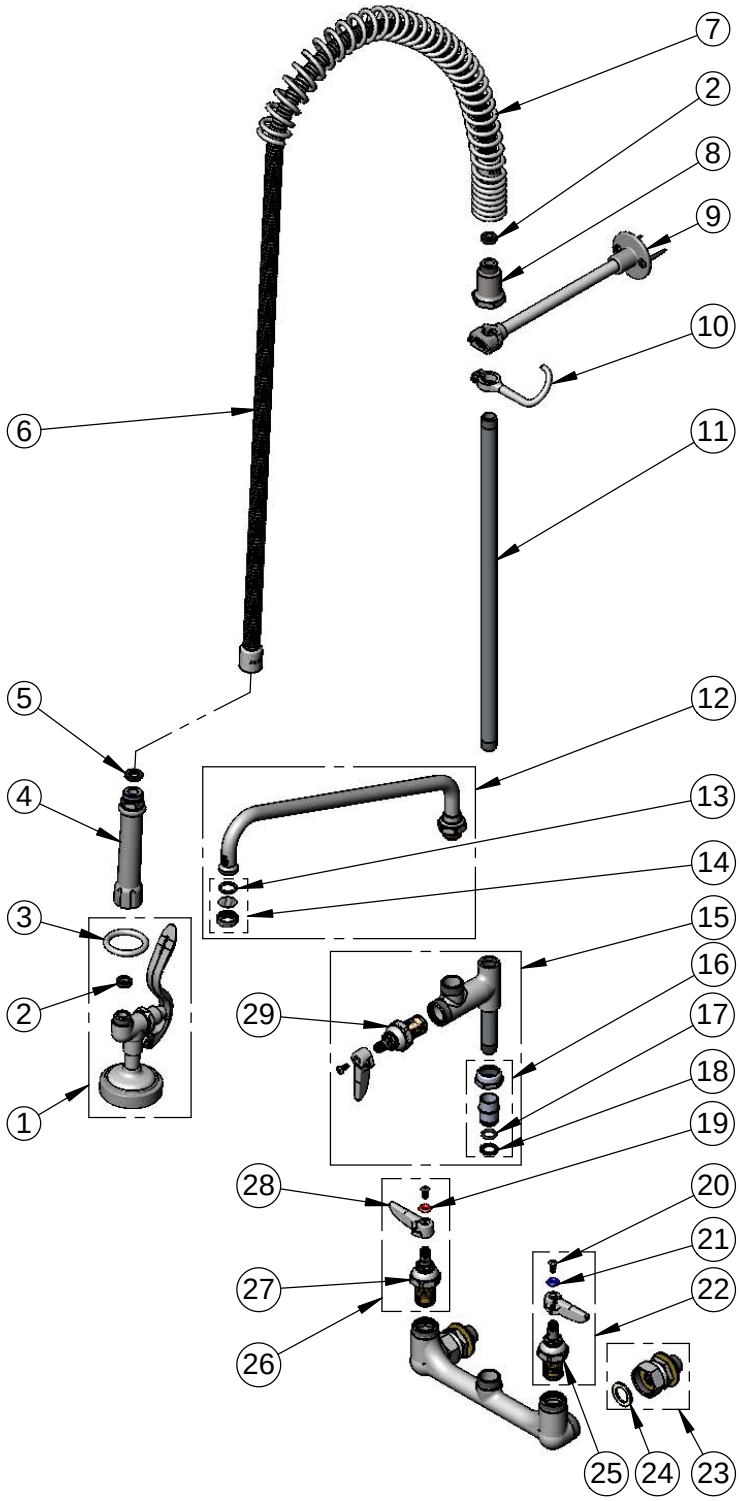

ITEM NO.	SALES NO.	DESCRIPTION
1	B-0107	1.42 GPM Spray Valve
2	010476-45	#27 Washer
3	000907-45	Spray Valve Hold Down Ring
4	002987-40	Grip Handle Assembly
5	001014-45	Washer, B-0100 Hose Barrel
6	B-0056-H2A	56" Flexible Stainless Steel Hose, Less Handle
7	000888-45	EasyInstall Overhead Spring
8	000821-40	Spring Body
9	B-0109-02	9" Wall Bracket
10	004R	Finger Hook
11	000369-40	3/8" NPT x 18" Riser
12	063X	14" Swing Nozzle
13	001048-45	Nozzle Tip Washer
14	B-PT	Stream Regulator Outlet
15	B-0155-LNEZ	EasyInstall Add-On Faucet, Less Swing Nozzle
16	EZ-K	EasyInstall Kit: Nut, Bushing, O-ring & Lock Washer
17	001065-45	O-Ring
18	014200-45	Star Washer, Anti-Rotation
19	001661-45	Red Index-HW
20	000922-45	Lever Handle Screw
21	001660-45	Blue Index-CW
22	002711-40	Eterna Cartridge, LTC w/ Spring Check, Handle, Index & Screw
23	00CC	1/2" NPT Male Inlet Flange
24	001019-45	Coupling Nut Washer
25	012442-40	Eterna Cartridge, LTC w/ Spring Check
26	002712-40	Eterna Cartridge, RTC w/ Spring Check, Handle, Index & Screw
27	012443-40	Eterna Cartridge, RTC w/ Spring Check
28	001638-45	Lever Handle
29	005960-40QT	1/4 Turn Eterna Cartridge, RTC

Product Specifications:

Pre-Rinse Unit: EasyInstall 8" Wall Mount Mixing Faucet, Eterna Cartridges w/ Spring Checks, Lever Handles, Add-On Faucet, 14" Swing Nozzle, 56" Flexible Stainless Steel Hose, 1.42 GPM Spray Valve, 9" Wall Bracket & 1/2" NPT Male Inlets

Product Compliance:

ASME A112.18.1 / CSA B125.1
NSF 61 - Section 9
NSF 372 (Low Lead Content)
EPAct 2005 (PRSV)

Drawn: KJG	Checked: JRM	Approved: JHB	Date: 03/14/14	Scale: NTS	Sheet: 2 of 2