Item No. _____
Quantity _____

# BEVERAGE-AIR

3779 Champion Blvd., Winston-Salem, NC 27105
1-888-845-9800 Fax# 1-336-245-6453
http://www.Beverage-Air.com

## SCHOOL MILK COOLERS
**SM SERIES**

**MODELS:**
**SM34N**
**SM49N**
**SM58N**

***CUSTOMER'S CHOICE FOR A HOT KITCHEN***
***Tested & Certified to Ambient Class of 100°F***

**3 Year Parts/Labor Warranty**
**Additional 2 Year Compressor Warranty**

### SM SERIES—SINGLE ACCESS, COLD WALL
Single access, cold wall milk coolers are designed to hold milk between 36°F and 38°F until ready to serve. Produced in three sizes to hold 8, 12, and 16 milk cases ( 13" x 13" x 11") per unit.

### CABINET CONSTRUCTION
Standard SM models include lids, doors, adjustable hinges, and door latches made from stainless steel. Balance of exterior is white finish on steel. One-piece, reinforced stainless steel floor for maximum milk crate support. Balance of interior is galvanized steel. Heavy-duty, epoxy coated steel wire floor racks are provided for added floor protection. Floor drain is centrally located for easy cleaning, connecting to drain hose with hose adapter.

Exterior thermometer, cylinder lock, bottom drain, and 4" swivel casters (2 with locks) are provided as standard.

Foamed-in-place CFC and HCFC-free polyurethane insulation enhances the structural strength of the cabinet and helps increase energy efficiency. This insulation helps to prevent liquid penetration that results in foul odors. Overall depth of 31" allows easy mobility and clear passage through most doorways.

Models are also offered with stainless steel exterior in place of white finish on steel. A stainless steel interior is optionally available. Additional options include wrap around and corner bumpers.

### REFRIGERATION
Refrigeration system uses R404A refrigerant, which is CFC and HCFC-free for compliance with environmental safety concerns.

### ELECTRICAL
Units wired at factory and ready for connection to a 115/60/1 phase, 15 amp dedicated outlet. 8' long cord and plug set included.

### SPECIAL FEATURES
- One-piece, reinforced stainless steel floor for maximum support of milk crates.
- SM models have earned the ENERGY STAR®.
- Stainless options available.

**SM34N** **(white exterior shown)**

**SM49N** **(white exterior shown)**

**ELECTRICAL CONNECTION**

115/60/1
NEMA-5-15P

Units pre-wired at factory and include 8' long cord and plug set.

***Note**: Not all markings may apply to all

Available From:

| | | | |
|---|---|---|---|
| **Model Specified** | _____ | **Store#** | _____ |
| **Location** | _____ | **Quantity** | _____ |

BEVERAGE-AIR

## SM SERIES School Milk Coolers
### Models: SM34N, SM49N, SM58N

| MODEL | SM34N | SM49N | SM58N |
|---|---|---|---|
| **EXTERNAL DIMENSIONAL DATA** | | | |
| Length Overall (inches)<br>Length Overall (mm) | 34 1/2”<br>876 | 49 1/2”<br>1257 | 58 1/2”<br>1486 |
| Depth Overall (inches)<br>Depth Overall (mm) | 31”<br>787 | 31”<br>787 | 31”<br>787 |
| Height Overall— (inches)<br>Height Overall—(mm) | 39 1/2”<br>1003 | 39 1/2”<br>1003 | 39 1/2”<br>1003 |
| Number of doors/lids | Single/Access | Single/Access | Single/Access |
| **INTERNAL DIMENSIONAL DATA** | | | |
| NET Capacity (cubic ft.)<br>NET Capacity (Liters) | 13.6<br>385 | 20<br>566 | 24<br>679 |
| **CASE CAPACITIES** | | | |
| 13” x 13” x 11” | 8 | 12 | 16 |
| 19” x 13” x 11” | 4 | 8 | 10 |
| **ELECTRICAL DATA** | | | |
| Full Load Amperes 115/60/1 | 4 | 7.5 | 7.5 |
| **ENERGY CONSUMPTION (KWH)** | 2 | 1.8 | 2.25 |
| **REFRIGERATION DATA** | | | |
| Horsepower | 1/4 | 1/4 | 1/3 |
| **WEIGHT DATA** | | | |
| Gross Weight (Crated lbs) | 277 | 339 | 376 |
| Gross Weight (Crated kg) | 126 | 154 | 171 |

***Note**: Not all markings may apply to all model variations.

## PLAN VIEWS

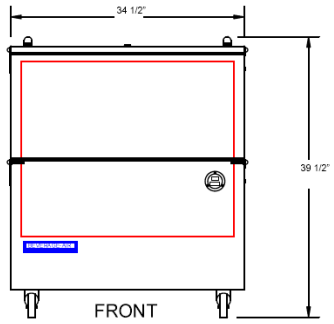


**SM34N**

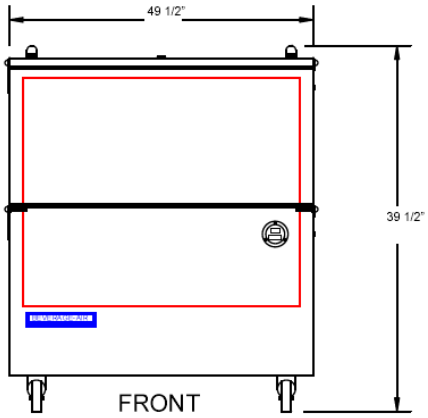


**SM49N**

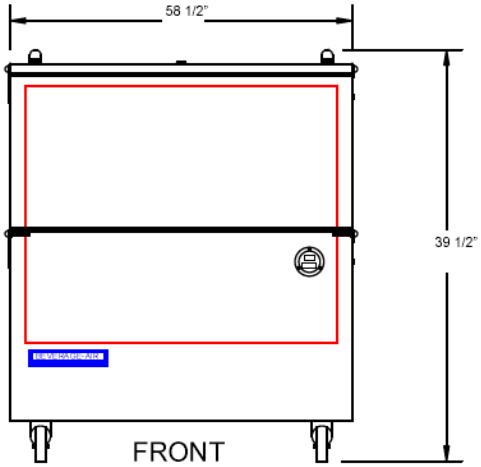


**SM58N**

## ELECTRICAL CONNECTION

Units pre-wired at factory and include 8’ long cord and plug set.

115/60/1
NEMA-5-15P

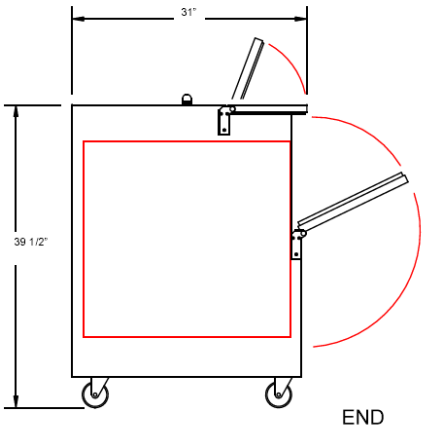



**BEVERAGE-AIR® CORPORATION**

3779 Champion Blvd. • Winston-Salem, NC 27105 USA • (336) 245-6400 • Fax (336) 245-6453 • (888) 845-9800 • www.beverage-air.com



Specifications are subject to change without prior notice. 08/13