nemco® | FOOD EQUIPMENT

Item No. _____

Quantity _____

AIA File No. _____

WAFFLE BAKERS:
Model Nos. 7000A, 7000A-S,7000A-240
7000A-S240, 7000A-2, 7000A-2S
7000A-2240, 7000A-2S240

BELGIAN WAFFLE BAKERS:
Model Nos. 7020A, 7020A-1, 7020A-S
7020A-1S, 7020A-1AS, 7020A-208,
7020A-1208, 7020A-1S208 7020A-S208,
7020A-240, 7020A-S240

WAFFLE BAKERS and BELGIAN WAFFLE BAKERS

7000A-2S 7000A-S

7020A

Digitally controlled, single and dual-grid NEMCO Waffle Bakers let you serve crisp, golden brown waffles with convenience and ease. Our exclusive floating hinge allows the top grid to rise as the waffle bakes. Up to 20, 7" diameter waffles can be made per hour/grid. The waffle is 1/2" thick.

NEMCO's Belgian Waffle Bakers combine digitally controlled precision cooking with heavy-duty cast aluminum construction and the grid rotation lets you easily serve consistently great tasting, and uniform crisp waffles. Up to 20, 7" diameter waffles can be made per hour. The waffle is 1 1/4" thick.

The NEW Auto Start Belgian Waffle Baker makes baking waffles even easier. Just pour in the batter, close the grid and rotate. The timer automatically starts when the grids are rotated (7020A-1AS).

Standard Features:

- Digital Programmable controls with count down timer
- Standard LED display and electronic audible alarm
- Top Mounted Control Panel, minimizes mess
- Single or Double grids available in waffle bakers
- Belgian Waffle Baker available with fixed (removable with tools) or removable grids, (removable without tools)
- Belgian Waffle Baker grids rotate to make fluffier waffles and lock for reducing batter overflow
- Series 7000A is available in 120V or 240V units
- Series 7020A is available in 120V, 208V, and 240V units
- Coiled Spring "Cool Touch" handles
- Constructed of brushed stainless steel and stainless steel tubing
- Cast Aluminum Grids
- cETLus, NSF listed

Accessories:

- Non-stick coating available on Waffle Baker and Belgian Waffle Baker
- Drip Tray for Belgian Waffle Baker / optional

NSF ETL c US Intertek MANUFACTURED IN THE USA

NEMCO Food Equipment, Ltd.
301 Meuse Argonne Ave.
Hicksville, OH 43526
Phone (419) 542-7751
FAX (419) 542-6690
www.nemcofoodequip.com

Printed 8/17 Printed in U.S.A.

AIA File No.

Model Nos.

Waffle Baker:	7000A	7000A-240	7000A-2	7000A-2240		
Non-stick Coating	7000A-S	7000A-S240	7000A-2S	7000A-S240		
Belgian Waffle Baker:	7020A	7020A-1	7020A-208	7020A-1208	7020A-240	
Non-stick Coating:	7020A-S	7020A-1S	7020A-1AS	7020A-S208	7020A-S240	7020A-S240

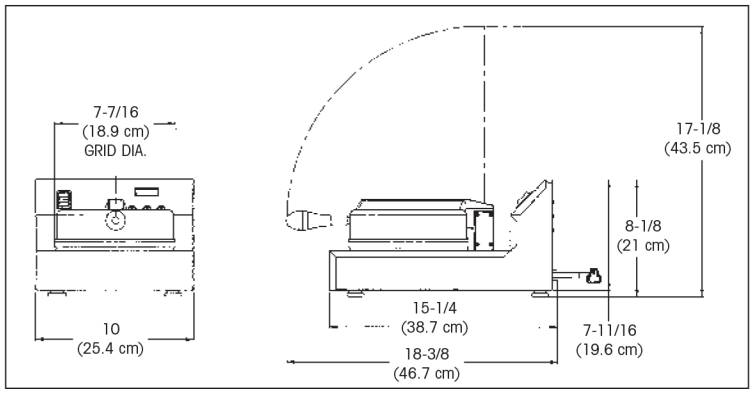

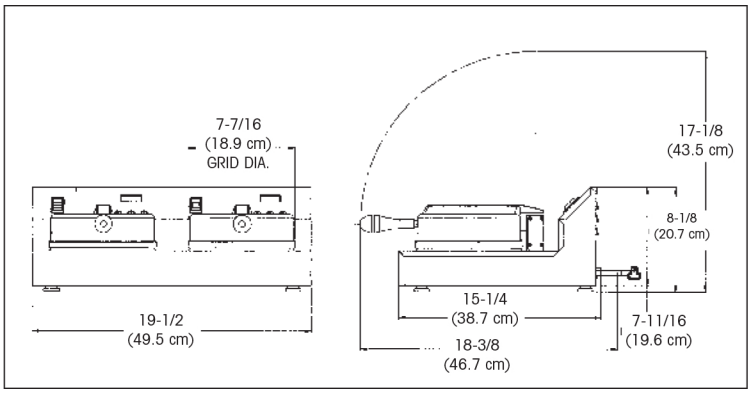

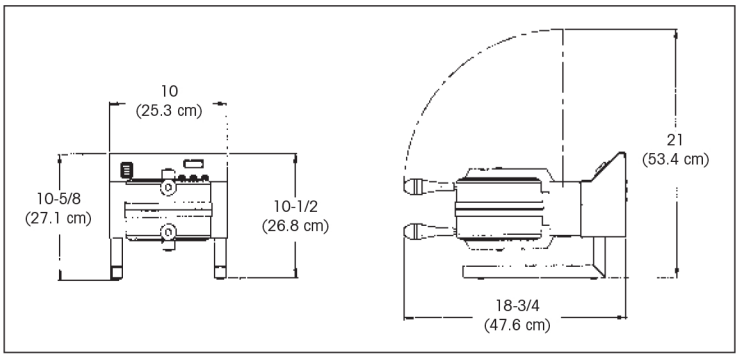

Specifications:

Model No.	Grids	Width Inches (cm)	Depth Inches (cm)	Height** Inches (cm)	Voltage	Rated Wattage	Nominal Amps	Operating Temperature (pre-heat time)	NEMA Plug	Unit Weight lbs./ (Kg)	Shipping Weight lbs./ (Kg)
7000A, 7000A-S*	1-7"	10" (25.4)	18 3/8" (46.7)	8 1/8" (20.7)	120	890	7.4	250-410° (12 minutes)	5-15P	17 (7.8)	21 (9.6)
7000A-240, 7000A-S240*	1-7"	10" (25.4)	18 3/8" (46.7)	8 1/8" (20.7)	240	890	3.7	250-410° (12 minutes)	6-15P	17 (7.8)	21 (9.6)
7000A-2, 7000A-2S*	2-7"	19 1/2" (49.5)	18 3/8" (46.7)	8 1/8" (20.7)	120	1780	14.8	250-410° (12 minutes)	5-15P	32 (14.6)	38 (17.3)
7000A-2240, 7000A-S240*	2-7"	19 1/2" (49.5)	18 3/8" (46.7)	8 1/8" (20.7)	240	1780	7.4	250-410° (12 minutes)	6-15P	32 (14.6)	38 (17.3)
7020A, 7020A-S*	1-7" removable	10" (25.4)	18 3/4" (47.6)	10 5/8" (27.1)	120	980	8.2	250-410° (12 minutes)	5-15P	19 1/2 (8.9)	26 (11.8)
7020A-1, 7020A-1S*	1-7" fixed	10" (25.4)	18 3/4" (47.6)	10 5/8" (27.1)	120	980	8.2	250-410° (12 minutes)	5-15P	19 1/2 (8.9)	26 (11.8)
7020A-1AS*	1-7" fixed	11 1/2" (29.2)	19 1/2" (49.5)	10 3/4" (27.3)	120	890	7.5	250-410° (12 minutes)	5-15P	19 1/2 (8.9)	26 (11.8)
7020A-208, 7020A-S208*	1-7" removable	10" (25.4)	18 3/4" (47.6)	10 5/8" (27.1)	208	980	4.7	250-410° (12 minutes)	6-15P	19 1/2 (8.9)	26 (11.8)
7020A-240, 7020A-S240*	1-7" removable	10" (25.4)	18 3/4" (47.6)	10 5/8" (27.1)	240	980	4.1	250-410° (12 minutes)	6-15P	19 1/2 (8.9)	26 (11.8)

* Non-stick coating on grids
** Height is with the top closed Waffle Baker open =17 1/8" (43.5cm), Belgian Waffle Baker = 21" (53.4cm)

Optional Accessory

Model 77241 Drip Tray for Belgian Waffle Bakers.

Typical Specifications

NEMCO Waffle Bakers shall be constructed with stainless steel and aluminum. They shall have uncoated aluminum grids or non-stick coated grids. All units shall have a full sheath ring heating element with a maximum temperature of 410°F, a programmable control board, with LED display, and a "Cool Touch" coiled spring handle.120V models shall come with a NEMA 5-15P plug and the 208/240V models shall have a NEMA 6-15P plug attached to the 42" cords. All machines shall be cETLus and NFS listed.

nemco® | FOOD EQUIPMENT

NEMCO Food Equipment, Ltd.
301 Meuse Argonne Ave.
Hicksville, OH 43526
Phone 419-542-7751
FAX 419-542-6690
www.nemcofoodequip.com