ALTO-SHAAM®

ITEM NO. _____

TY2-72 SERIES
TY2SYS-72 SERIES
HEATED DISPLAY SYSTEMS

TY2-72

TY2SYS-72

- HALO HEAT ... a controlled, uniform heat source that gently holds and surrounds food for better appearance, taste, and longer holding life.
- Holds and displays hot food fresh and moist for hours — without adding water.
- Expandable system to meet your specific requirements.
- Matches profile of leading refrigerated display case.
- **HOT DISPLAY CASE**
  - — Curved glass styling.
  - — Displays hot food without condensation on glass.
  - — Thermostatically controlled heat source radiates from the base of the display case in multiple heat zones.
  - — Overhead light zones with shatterproof coated bulbs.
  - — Holds a full range of standard (gastronorm) pan sizes, full-size or half-size sheet pans.
  - — Tempered sliding glass doors reflect heat back into the products and mirror the display to enhance merchandising effect.
- **DECORATOR BASE**
  - — Standard black painted front and end panels.
  - — Protected with a environmentally friendly bumper, made of 93% pre-consumer polycarbonate waste and is 100% recyclable.
- **SELF-SERVICE HOT DISPLAY**
  - — Customer self-service opening is available on right side, left side, or across the full length of case.
  - — Front mounted heat-guard provides customer protection.

The display case is constructed of 18 gauge, stainless steel. A tempered glass front encloses the display case and can be lifted to a 90 degree angle for easy cleaning. Removable, sliding glass doors on the operator side are included. Sliding door tracks have a "clean sweep" cutout allowing for easy cleaning and crumb removal. Framed end glass with rubber gasket material protects glass edges from chipping and breakage. The base is divided into two (2) individually managed heat zones with each zone controlled by a separate thermostat with a range of 1 through 10 and heat-on indicator light. Overhead lights are controlled by ON/OFF switches in two (2) light zones. Two (2) 125V plug outlets are available as an option on 120/208-240V units only. Countertop display cases include one set of 4" (102mm) legs.

- ☐ **TY2-72** - 72" (1829mm) length
- ☐ **TY2SYS-72*** - 72" (1829mm) length, with base
- ☐ **TY2-72/P** - 72" (1829mm) length, 71-5/16" (1811mm) self-service opening across full length of case front
- ☐ **TY2SYS-72/P*** - 72" (1829mm) length, with base, 71-5/16" (1811mm) self-service opening across full length of case front
- ☐ **TY2-72/PL** - 72" (1829mm) length, 23-3/4" (603mm) self-service opening on left side of case front
- ☐ **TY2SYS-72/PL*** - 72" (1829mm) length, 23-3/4" (603mm) with base, self-service opening on left side of case front
- ☐ **TY2-72/PR** - 72" (1829mm) length, 23-3/4" (603mm) self-service opening on right side of case front
- ☐ **TY2SYS-72/PR*** - 72" (1829mm) length, with base, 23-3/4" (603mm) self-service opening on right side of case front

*The system base is not sold as a separate item. Order the full TY2SYS model to receive the base.

c UL us LISTED COOKING APPLIANCE 584m

ANSI/NSF 4

IP X3

HALO HEAT®

FACTORY INSTALLED OPTIONS

- Electrical Choices
  - ☐ 120/208-240V
  - ☐ 230V
  - ☐ 380-415V
- End Glass Choices
  - ☐ Clear Glass, standard
  - ☐ Solar Bronze Glass, optional [5011901]
- ☐ Temperature Probe, optional [5004917]
- Panel Color Choices
  - ☐ Black painted, standard
  - ☐ 1" (25mm) Black formica system end panel, optional [PE-26780]
  - ☐ Stainless Steel
  - ☐ Custom Color painted
- ☐ Independent Electrical Outlet, optional [5001781]
- ☐ Temperature Gauge, optional [GU-33384]

W164 N9221 Water Street • P.O. Box 450 • Menomonee Falls, Wisconsin 53052-0450 • U.S.A.

PHONE: **262.251.3800** **800.558.8744** U.S.A./CANADA FAX: **262.251.7067** **800.329.8744** U.S.A. ONLY

www.alto-shaam.com

AutoQuotes

TY2-72 SERIES
TY2SYS-72 SERIES
HEATED DISPLAY SYSTEMS

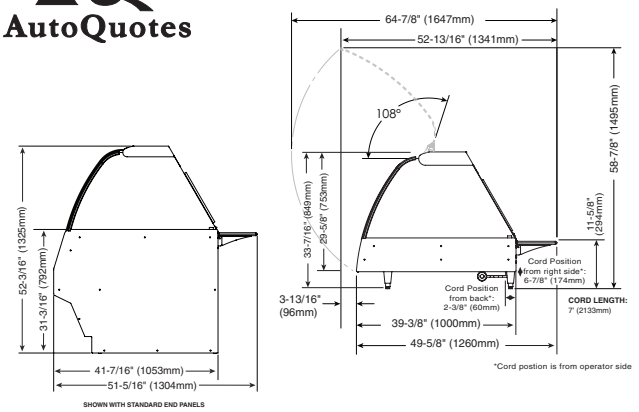

DIMENSIONS (H X W X D)

EXTERIOR, COUNTERTOP MODEL WITH LEGS:
33-7/16" x 72" x 49-5/8" (849mm x 1829mm x 1260mm)

EXTERIOR, WITH BASE, STANDARD PAINTED END PANELS
52-3/16" x 72" x 51-5/16" (1325mm x 1829mm x 1304mm)

EXTERIOR, WITH BASE, OPTIONAL 1" (25mm) END PANELS
52-3/16" x 74" x 52" (1325mm x 1880mm x 1322mm)

WELL DIMENSIONS (W X L X D):
27-3/16" x 69-5/16" x 4-1/2" (690mm x 1760mm x 114mm)

ELECTRICAL

VOLTAGE	PHASE	CYCLE/HZ	AMPS	kW	
120/208-240	1	50/60	18.8	4.5	NEMA L14-30P 30A, 250V PLUG
208	1	50/60	16.3	3.4	
240	1	50/60	18.8	4.5	(PLUG - COUNTERTOP ONLY; TERMINAL BLOCK - SYSTEM)
230	1	50/60	18.3	4.2	BARE END, NO PLUG (COUNTERTOP ONLY) (TERMINAL BLOCK - SYSTEM)
380-415	3	50/60	9.2	4.4	
380	3	50/60	8.0	3.3	BARE END, NO PLUG (COUNTERTOP ONLY) (TERMINAL BLOCK - SYSTEM)
415	3	50/60	9.2	4.4	

TY2SYS Profile *TY2 Profile*

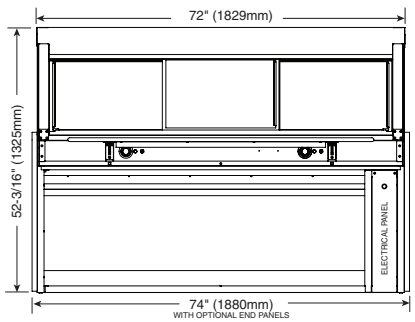

TY2SYS-72

PAN CONFIGURATION*

PAN SIZE	DIMENSIONS	QTY.
FULL-SIZE & ONE-THIRD**:	12" x 20" x 2-1/2" (GN 1/1)	5
	12" x 6" x 2-1/2" (GN 1/3)	5
HALF-SIZE & ONE-THIRD**:	12" x 10" x 2-1/2" (GN 1/2)	10
	12" x 6" x 2-1/2" (GN 1/3)	5
FULL-SIZE SHEET PANS:	18" x 26" x 1"	3
MAX. CAPACITY/VOLUME:	80 lbs (36 kg) 50 qts (60 L)	

* Pans are not included with display case.
** Will also accept 4" (100mm) deep pans.

INSTALLATION REQUIREMENTS

Display case must be installed level. The display case must not be installed in any area where it may be affected by steam, grease, dripping water, high temperatures, or any other severely adverse conditions.

Do not install a heated display case near a cold air source such as a freezer, air conditioning vents, or in any area where outside air fluctuation can affect performance.

WEIGHT

MODEL	NET	SHIP
TY2-72	385 lb (175 kg)	600 lb (272 kg)
TY2SYS-72	621 lb (282 kg)	721 lb (327 kg)
TY2-72/P	360 lb (163 kg)	575 lb (261 kg)
TY2SYS-72/P	660 lb (299 kg)	760 lb (345 kg)
TY2-72/PL; /PR	435 lb (197 kg)	650 lb (295 kg)
TY2SYS-72/PL; /PR	700 lb (318 kg)	800 lb (363 kg)

CRATED DIMENSIONS: L X W X H
TY2-72: 80" x 50" x 45" (2032mm x 1270mm x 1143mm)
TY2SYS-72: 80" x 50" x 60" (2032mm x 1270mm x 1524mm)

SPECIFICATIONS

- Ten (10) overhead lights with two (2) light zones.
- Two (2) base heat zones with two (2) adjustable thermostats with a range of 1 through 10, and two (2) heat-on indicator lights.
- Three (3) tinted, reflective, tempered glass sliding doors on operator side.
- One (1) 10" x 60" (254mm x 1524mm) operator-side work shelf.
- Self-serve model 72/P has a self-serve pan insert 26-7/16" x 69-3/16" x 2" (672mm x 1757mm x 51mm) and includes three (3) Wire Pan Grids.
- Self-serve models 72/PL and 72/PR have a self-serve pan insert 21-5/8" x 26-7/16" x 2" (549mm x 672mm x 51mm) and includes one (1) Wire Pan Grid.

ACCESSORIES

SEAMLESSLY CONNECT MULTIPLE UNITS		SHEET PAN DIVIDER BAR PACKAGE	
☐ BUTTING KIT, COUNTERTOP	5015250	☐ FULL-SERVICE	5002803
☐ BUTTING KIT, SYSTEM	5009001	☐ SELF-SERVICE LEFT-SIDE OR RIGHT-SIDE OF CASE	5002804
☐ CARVING STATION	5001874	☐ THERMOSTAT GUARD COVER PLATE	5007660
☐ PAN INSERT, SELF-SERVICE 4" (102mm) DEEP	1001991	☐ WORK SHELF WITH GRAVY LANE	5005639
☐ PLATFORM SCALE (SPECIFY RIGHT-HAND OR LEFT-HAND)	55265		

ALTO-SHAAM®
W164 N9221 Water Street • P.O. Box 450 • Menomonee Falls, Wisconsin 53052-0450 • U.S.A.
PHONE: 262.251.3800 800.558.8744 U.S.A./CANADA FAX: 262.251.7067 800.329.8744 U.S.A. ONLY
www.alto-shaam.com

DUE TO ONGOING PRODUCT IMPROVEMENT, SPECIFICATIONS ARE SUBJECT TO CHANGE WITHOUT NOTICE.
PRINTED IN U.S.A.