CAMBRO

Service Carts

Open Sides

Models BC225, BC2254S
BC230, BC2304S
BC235, BC2354S

StoreSafe

Features & Benefits

- These sturdy carts are built to handle transporting prepared foods, table set up service or bussing boxes full of dirty dishware.
- Raised sides prevent bus boxes from slipping off.
- Open sided service cart can be loaded or unloaded on either side for greater speed and efficiency.
- One-piece molded high-density polyethylene construction is extremely durable and easy to clean.
- Foamed-in polyurethane insulation adds structural strength and reduces noise.
- Molded-in handle provides sturdy and controlled handling. Will not bend or break.
- Four heavy duty 5” (12,7 cm) or 3” (7,6 cm) casters are bolted to molded-in metal plates to create quiet, easy transportation.

  Model BC225 - 3” (7,6 cm), 2 fixed, 2 swivel, 1 w/ brake
  Model BC2254S - 3” (7,6 cm), 4 swivel, 1 w/ brake
  Model 230 - 5” (12,7 cm), 2 fixed, 2 swivel, 1 w/ brake
  Model 2304S - 5” (12,7 cm), 4 swivel, 1 w/ brake
  Model 235 - 5” (12,7 cm), 2 fixed, 2 swivel, 1 w/ brake
  Model 2354S - 5” (12,7 cm), 4 swivel, 1 w/ brake
- Optional removable 11 gallon (42 L) Trash Container and Catch-All Silverware Holder available.
- No assembly required.
- Available in 10 colors.

Item No. _____

Specifier Identification No. _____

Model No. _____

Quantity _____

BC225

BC235

Catch-All Silverware Holder

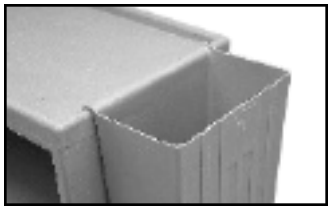

11 Gallon (42 L) Trash Container

Approvals

NSF

© 2002 Cambro Manufacturing Company
5801 Skylab Road, Huntington Beach, California 92647-2056-U.S.A.
Telephone (1)714 848 1555 **Toll Free** 800 854 7631 **Customer Service Hot Line** 800 833 3003

Service Carts

Open Sides

Models BC225, BC2254S
BC230, BC2304S
BC235, BC2354S

Item No. _____

Specifier Identification No. _____

Model No. _____

Quantity _____

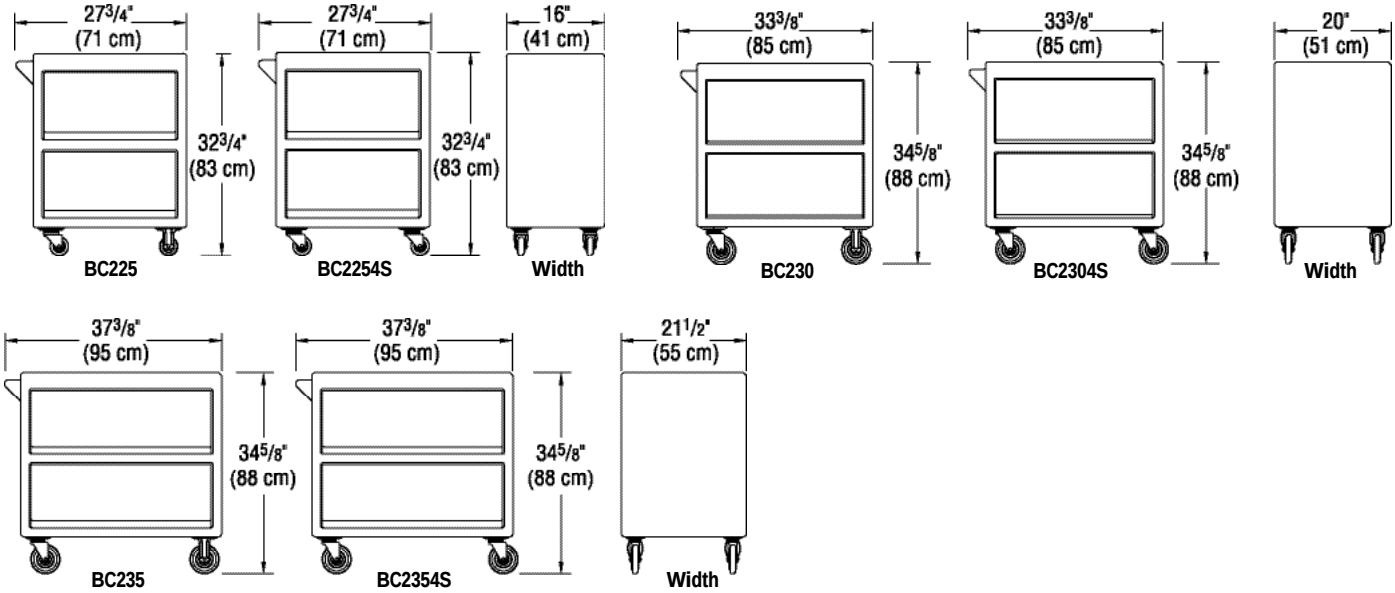

Specifications

Dimension Tolerance: +/- 1/4" (0,64 cm)

Code	Description	Load Capacity	Shelf Dimensions L x W x H	Exterior Dimensions L x W x H	Case lbs./cube Kg/m³
BC225	Service Cart - Open Sides	350 lbs. (159 Kg.)	21¾" x 15½" x 11¼" (56 x 39 x 29 cm)	27¾" x 16" x 32¾" (71 x 41 x 83 cm)	41 (9.20) 18 (0,26)
BC2254S	Service Cart - Open Sides	350 lbs. (159 Kg.)	21¾" x 15½" x 11¼" (56 x 39 x 29 cm)	27¾" x 16" x 32¾" (71 x 41 x 83 cm)	43 (9.20) 18 (0,26)
BC230	Service Cart - Open Sides	500 lbs. (363 Kg.)	27" x 19½" x 11¼" (69 x 49,5 x 29 cm)	33⅜" x 20" x 34⅝" (85 x 51 x 88 cm)	62 (15.13) 26 (0,42)
BC2304S	Service Cart - Open Sides	500 lbs. (363 Kg.)	27" x 19½" x 11¼" (69 x 49,5 x 29 cm)	33⅜" x 20" x 34⅝" (85 x 51 x 88 cm)	61 (15.13) 26 (0,42)
BC235	Service Cart - Open Sides	500 lbs. (363 Kg.)	31½" x 20⅜" x 11⅜" (79 x 52 x 29 cm)	37⅜" x 21½" x 34⅝" (79 x 52 x 29 cm)	69 (17.85) 29,5 (0,5)
BC2354S	Service Cart - Open Sides	500 lbs. (363 Kg.)	31½" x 20⅜" x 11⅜" (79 x 52 x 29 cm)	37⅜" x 21½" x 34⅝" (95 x 55 x 88 cm)	68 (17.85) 29,5 (0,5)

Optional Accessories

11 Gal. (42 L) Trash Container ❑ BC11TC
Catch-All Silverware Holder ❑ BC1115SH

Standard Colors

❑ Dusty Rose (400) ❑ Slate Blue (401) ❑ Dark Brown (131)
❑ Coffee Beige (157) ❑ Gray (180) ❑ Brick Red (402)
❑ Granite Gray (191) ❑ Granite Green (192) ❑ Granite Red (193)
❑ Granite Sand (194)

Architect Specs

The open sided Service Cart shall be Cambro Model... manufactured by Cambro Mfg. Co., Huntington Beach, CA 92648 U.S.A. It shall be constructed of single-molded, double-wall, high density polyethylene and thick foam injected polyurethane. It shall have rounded corners and molded-in handles. It shall have raised sides on top to prevent bus boxes from slipping off. It shall have open sides for easy loading and unloading. It shall be available with 3" (7,6 cm) or 5" (12,7 cm) casters that are bolted into molded-in metal plates. The casters shall be available with 2 fixed, 2 swivel or 4 swivel and all sets come with 1 caster that has a brake. It shall be available with an optional removable 11 gallon (42 L) Trash Container and Catch-All Silverware Holder. It shall not require any assembly and shall be available in 10 colors.

Approvals

NSF

CAMBRO MANUFACTURING COMPANY
http://www.cambro.com

© 2002 Cambro Manufacturing Company 5801 Skylab Road, Huntington Beach, California 92647-2056-U.S.A.
Telephone (1)714 848 1555 **Toll Free** 800 854 7631 **Customer Service Hot Line** 800 833 3003
Printed in USA