CAMBRO

Camshelving® Premium Series

Stationary Starter & Add-On Units
4 or 5 Vented Shelves

HEIGHT	DEPTHS	LENGTHS	
1	3	8	
72"	18"	24"	48"
	21"	30"	54"
	24"	36"	60"
		42"	72"

- **Starter Units include:**
  2 factory assembled post kits, 8 or 10 shelf traverses and shelf plates.
- **Add-On Units include:**
  1 factory assembled post kit, 8 or 10 shelf traverses and shelf plates.

All units ship complete in 1 box, except 72" long units which ship in kits (post kits are unassembled) due to overall unit weight.

StoreSafe

camguard
ANTIMICROBIAL SHELF PLATES

Item No. _____

Quantity _____

AIA File / Spec No. _____

Job _____

Stationary Starter Unit

Stationary Add-On Unit

Features & Benefits

- Designed for use in high-volume operations with constant loading of heavy products and frequent daily deliveries.
- Use in walk-in coolers, freezers, dry storage, warewashing areas, loading docks or front of the house. Withstands storage temperatures -36˚ to 190˚F (-38˚ to 88˚C). Impervious to moisture, chemicals, salt, food acids and humidity.
- Posts and traverses have a steel core and smooth polypropylene exterior for superior strength and durability. Traverse dovetails are molded into posts.
- Smooth polypropylene shelf plates contain Camguard, an antimicrobial technology that inhibits the growth of mold, fungus and bacteria that may cause odors, stains and product degradation.
- Shelving Units interconnect in straight lines with shared posts. Uniquely engineered Post Connectors offer exceptional cross stabilization. Weight bearing is uncompromised and space is maximized. No add-on clips or "S" hooks required.
- Use corner connectors to add shelves in corners or to install intermediate shelves between 2 starter units. Unique patented design ensures maximum space utilization.
- Posts and traverses wipe clean. Traverses and shelf plates remove easily for cleaning.
- Shelf traverses can be removed and adjusted at 4" (10,2 cm) increments.
- Sturdy reinforced nylon foot adjusts easily to level units.
- Requires some assembly with minimal parts. Use a rubber mallet only.
- Lifetime warranty against rust and corrosion (posts, traverses and shelf plates).
- Available in 1 color – Speckled Gray (480).

4 Shelf Unit Weight Bearing Chart

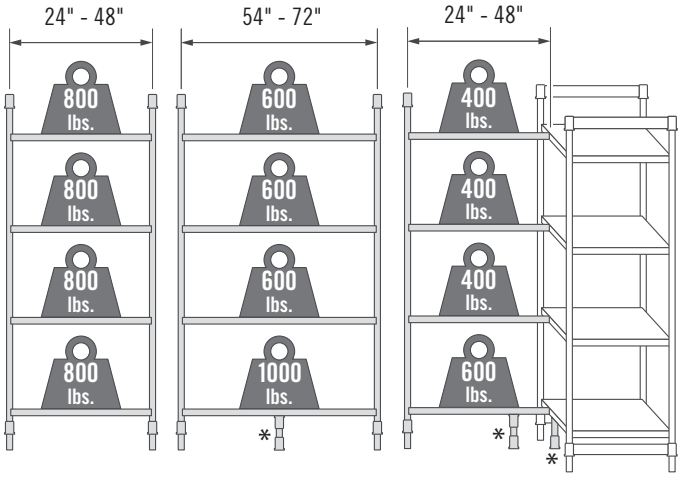

Single Unit	Single Unit with Dunnage Stand	Corner Unit with 2 Dunnage Stands
3200 lbs. Maximum Unit Capacity	**2800 lbs.** Maximum Unit Capacity	**1800 lbs.** Maximum Unit Capacity

* Dunnage Stands add stability and increase weight bearing capacity on bottom shelf only. Add to any shelf length. Highly recommended for Starter Units 54" and longer, all Corner Units, U-Shape Units and units specified for heavier loads.

Approvals

NSF COMPONENT

Post Connectors, Corner Connectors, Seismic Foot, Wall Fastener, Identification Tags, Security Cages, Tray Slide Rack, Shelf Rails, Divider Bars, High Density Track and Extension Kits are not NSF Listed.

CAMBRO
TRUSTED FOR GENERATIONS™
www.cambro.com

Information and specifications are subject to change without notice. Please confirm at time of order.

© Cambro Manufacturing Company 5801 Skylab Road, Huntington Beach, California 92647-2056, U.S.A.

Telephone 714 848 1555 **Toll Free** 800 854 7631 **Customer Service** 800 833 3003 **Email:** customerservice@cambro.com

Printed in USA. REV. 08/16

Camshelving® Premium Series

Stationary Starter & Add-On Units
4 or 5 Vented Shelves

Item No. _____

Quantity _____

AIA File / Spec No. _____

Job _____

72" HEIGHT

V4 4-Shelf Vented Units

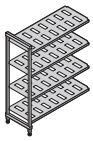

	Starter LENGTH	Starter CODE	Add-On LENGTH	Add-On CODE
18" DEPTH	24"	CPU182472V4	22¼"	CPA182472V4
	30"	CPU183072V4	28¼"	CPA183072V4
	36"	CPU183672V4	34¼"	CPA183672V4
	42"	CPU184272V4	40¼"	CPA184272V4
	48"	CPU184872V4	46¼"	CPA184872V4
	54"	CPU185472V4	52¼"	CPA185472V4
	60"	CPU186072V4	58¼"	CPA186072V4
	72"	CPU187272V4PKG	70¼"	CPA187272V4PKG
21" DEPTH	24"	CPU212472V4	22¼"	CPA212472V4
	30"	CPU213072V4	28¼"	CPA213072V4
	36"	CPU213672V4	34¼"	CPA213672V4
	42"	CPU214272V4	40¼"	CPA214272V4
	48"	CPU214872V4	46¼"	CPA214872V4
	54"	CPU215472V4	52¼"	CPA215472V4
	60"	CPU216072V4	58¼"	CPA216072V4
	72"	CPU217272V4PKG	70¼"	CPA217272V4PKG
24" DEPTH	24"	CPU242472V4	22¼"	CPA242472V4
	30"	CPU243072V4	28¼"	CPA243072V4
	36"	CPU243672V4	34¼"	CPA243672V4
	42"	CPU244272V4	40¼"	CPA244272V4
	48"	CPU244872V4	46¼"	CPA244872V4
	54"	CPU245472V4	52¼"	CPA245472V4
	60"	CPU246072V4	58¼"	CPA246072V4
	72"	CPU247272V4PKG	70¼"	CPA247272V4PKG

Color: Speckled Gray (480).

V5 5-Shelf Vented Units

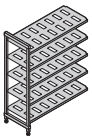

	Starter LENGTH	Starter CODE	Add-On LENGTH	Add-On CODE
18" DEPTH	24"	CPU182472V5	22¼"	CPA182472V5
	30"	CPU183072V5	28¼"	CPA183072V5
	36"	CPU183672V5	34¼"	CPA183672V5
	42"	CPU184272V5	40¼"	CPA184272V5
	48"	CPU184872V5	46¼"	CPA184872V5
	54"	CPU185472V5	52¼"	CPA185472V5
	60"	CPU186072V5	58¼"	CPA186072V5
	72"	CPU187272V5PKG	70¼"	CPA187272V5PKG
21" DEPTH	24"	CPU212472V5	22¼"	CPA212472V5
	30"	CPU213072V5	28¼"	CPA213072V5
	36"	CPU213672V5	34¼"	CPA213672V5
	42"	CPU214272V5	40¼"	CPA214272V5
	48"	CPU214872V5	46¼"	CPA214872V5
	54"	CPU215472V5	52¼"	CPA215472V5
	60"	CPU216072V5	58¼"	CPA216072V5
	72"	CPU217272V5PKG	70¼"	CPA217272V5PKG
24" DEPTH	24"	CPU242472V5	22¼"	CPA242472V5
	30"	CPU243072V5	28¼"	CPA243072V5
	36"	CPU243672V5	34¼"	CPA243672V5
	42"	CPU244272V5	40¼"	CPA244272V5
	48"	CPU244872V5	46¼"	CPA244872V5
	54"	CPU245472V5	52¼"	CPA245472V5
	60"	CPU246072V5	58¼"	CPA246072V5
	72"	CPU247272V5PKG	70¼"	CPA247272V5PKG

Optional Accessories

- ❑ Corner Connector Sets
- ❑ Bottom Shelf Dunnage Stands (Low or Tall)
- ❑ Shelf Identification Tags
- ❑ Wall Fastener
- ❑ Seismic Foot
- ❑ Shelf Divider Panel
- ❑ Shelf Divider Bars (Straight or Angled)
- ❑ Shelf Rails (Single or Double)
- ❑ Tray Sliding Rack
- ❑ Single Shelf Security Cage
- ❑ Full Wrap Security Cage
- ❑ Shelf Traverses (Single or Double)
- ❑ Drying and Storage Cradles

Architect Specs

Posts and Traverses: Internal steel core, reinforced polypropylene exterior.
Post Connectors: Reinforced polypropylene.
Shelf Plates: Reinforced polypropylene with Camguard™ antimicrobial.
Corner Connectors: Reinforced nylon.
Adjustable Foot: Reinforced nylon.

Approvals

NSF COMPONENT

Post Connectors, Corner Connectors, Seismic Foot, Wall Fastener, Identification Tags, Security Cages, Tray Slide Rack, Shelf Rails, Divider Bars, High Density Track and Extension Kits are not NSF Listed.

CAMBRO
TRUSTED FOR GENERATIONS™
www.cambro.com

Information and specifications are subject to change without notice. Please confirm at time of order.

© Cambro Manufacturing Company 5801 Skylab Road, Huntington Beach, California 92647-2056, U.S.A.

Telephone 714 848 1555 **Toll Free** 800 854 7631 **Customer Service** 800 833 3003 **Email:** customerservice@cambro.com

Printed in USA. REV. 08/16

D081602