CAMBRO

Camshelving® Ultimate Sheet Pan Racks

Project _____

Item No. _____

Model No. _____

Quantity _____

StoreSafe STORE FRESH

Full Size Racks 3" (7,6 cm) Rail Spacing

Hold 20 each 18 x 26 or 40 each 13 x 18 Sheet Pans

Full Size Racks 1½" (3,8 cm) Rail Spacing

Hold 40 each 18 x 26 or 80 each 13 x 18 Sheet Pans

Features & Benefits

- Mobile, multi-purpose, end load racks for holding, storing and transporting 18 x 26 or 13 x 18 Sheet Pans and 14 x 18 Meal Delivery Trays. Ideal for use in commercial and non-commercial kitchens.
- Moves easily between freezer (plastic caster units only), cooler and proofer, and holds hot pans from 350˚F (177˚C) oven.
- Choose from 3" (7,6 cm) or 1½" (3,8 cm) rail spacing. Wide rail spacing offers greatest versatility and ease of use. Narrow rail spacing best for high volume baking or cooking.
- Sheet pan holding capacity:
  - 1½" (3,8 cm) Rail Spacing: 40 each 18 x 26 or 80 each 13 x 18
  - 3" (7,6 cm) Rail Spacing: 20 each 18 x 26 or 40 each 13 x 18
- Unit weight bearing capacity is 350 lbs (159 kg). Weight bearing per rail set is 55 lbs (25 kg).
- Made from highly durable, 100% composite plastic material components with lifetime warranty against rust and corrosion. Easy to wipe clean. No metal, crossbars, screws or welds.
- Molded-in rails are bottom load only and feature unique raised ribs for quicker cooling and thawing.
- Positioning ribs on each rail end are slightly raised to keep sheet pans/trays centered.
- Top frame features molded in supports to hold a single 18 x 26 Sheet Pan flat to protect rack contents below.
- Caster options:
  - Four each 5" (12,7 cm) custom metal (zinc plated) swivel casters with center stem design for improved stability and maneuverability over uneven surfaces. Non-marking polyurethane wheel. 2 with brake, 2 without brake. Not intended for use in freezers.
  - Four each 5" (12,7 cm) premium plastic swivel casters with total locking brake that locks both swivel and wheel. Non-marking thermoplastic rubber wheel. Rust and corrosion free.
- Ships knockdown with minimal assembly required or 100% factory assembled.
- Components are easy to remove and replace if damaged, ensuring a lifetime of service.
- Accessories include Vinyl or Insulated Cover and select Camtrays®.
- Available in 1 color only – Brushed Graphite (580).

UPR1826FP40 with 1½" (3,8 cm) Rail Spacing and Plastic Casters

UPR1826F20 with 3" (7,6 cm) Rail Spacing and Metal Casters

Approvals

NSF COMPONENT

CAMBRO TRUSTED FOR GENERATIONS™ www.cambro.com

Information and specifications are subject to change without notice. Please confirm at time of order.

© Cambro Manufacturing Company 5801 Skylab Road, Huntington Beach, California 92647-2056, U.S.A.

Telephone 714 848 1555 **Toll Free** 800 854 7631 **Customer Service** 800 833 3003 **Email:** customerservice@cambro.com

Printed in USA. 11/18

Camshelving® Ultimate Sheet Pan Racks

Project _____

Item No. _____

Model No. _____

Quantity _____

Full Size Racks 3" (7,6 cm) Rail Spacing

Hold 20 each 18 x 26 or 40 each 13 x 18 Sheet Pans

Full Size Racks 1½" (3,8 cm) Rail Spacing

Hold 40 each 18 x 26 or 80 each 13 x 18 Sheet Pans

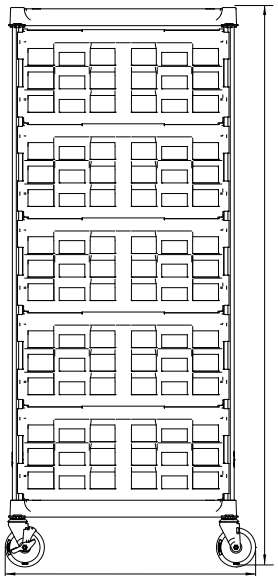

Metal Casters	Plastic Casters
71.38"	71.63"
71⅜"	71⅝"
(181,3 cm)	(181,9 cm)

Metal Casters	Plastic Casters
29.25"	33.38"
29¼"	33⅜"
(74,3 cm)	(84,8 cm)

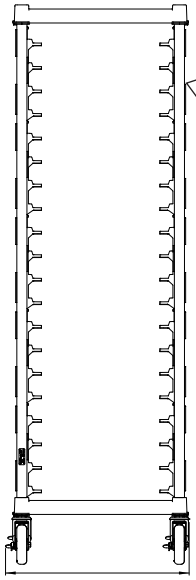

Metal Casters	Plastic Casters
25.5"	25.44"
25½"	25⁷⁄₁₆"
(64,8 cm)	(64,6 cm)

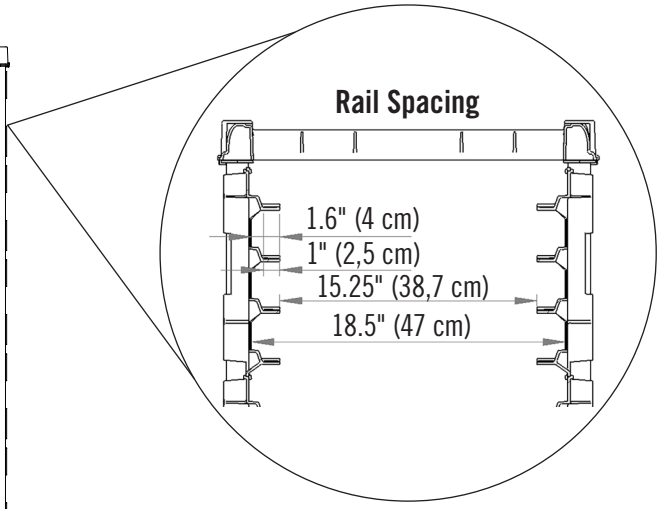

Specifications

With 3" (7,6 cm) Rail Spacing

Model	Caster Type	Dimensions (L x W x H)	Unit Weight	Ships
UPR1826F20	Metal	29.25" x 25.5" x 71.38" (74,3 x 64,8 x 181,3 cm)	50.19 lbs (22,8 kg)	Knockdown
UPR1826FA20	Metal	29.25" x 25.5" x 71.38" (74,3 x 64,8 x 181,3 cm)	50.19 lbs (22,8 kg)	Factory Assembled
UPR1826FP20	Plastic	33.38" x 25.4" x 71.63" (84,8 x 64,6 x 181,9 cm)	45.15 lbs (20,5 kg)	Knockdown
UPR1826FPA20	Plastic	33.38" x 25.4" x 71.63" (84,8 x 64,6 x 181,9 cm)	45.15 lbs (20,5 kg)	Factory Assembled

With 1.5" (3,8 cm) Rail Spacing

Model	Caster Type	Dimensions (L x W x H)	Unit Weight	Ships
UPR1826F40	Metal	29.25" x 25.5" x 71.38" (74,3 x 64,8 x 181,3 cm)	60.54 lbs (27,5 kg)	Knockdown
UPR1826FA40	Metal	29.25" x 25.5" x 71.38" (74,3 x 64,8 x 181,3 cm)	60.54 lbs (27,5 kg)	Factory Assembled
UPR1826FP40	Plastic	33.38" x 25.4" x 71.63" (84,8 x 64,6 x 181,9 cm)	55.60 lbs (25,3 kg)	Knockdown
UPR1826FPA40	Plastic	33.38" x 25.4" x 71.63" (84,8 x 64,6 x 181,9 cm)	55.60 lbs (25,3 kg)	Factory Assembled

Architect Specs

Mobile Posts: Proprietary non-corrosive composite material.
Post Connector Frames: Reinforced nylon.
Rail Panels: Reinforced polypropylene.
Post Connector Frame Wedges: Reinforced polypropylene.
Casters: Zinc plated frame with centered metal stem, non-marking polyurethane wheel with brake or no brake. Plastic nylon frame with metal stem, non-marking thermoplastic rubber wheel with total locking brake to stop motion and swivel.

Approvals

NSF COMPONENT

CAMBRO
TRUSTED FOR GENERATIONS™
www.cambro.com

Information and specifications are subject to change without notice. Please confirm at time of order.

© Cambro Manufacturing Company 5801 Skylab Road, Huntington Beach, California 92647-2056, U.S.A.

Telephone 714 848 1555 **Toll Free** 800 854 7631 **Customer Service** 800 833 3003 **Email:** customerservice@cambro.com

Printed in USA. 11/18

CSUPR1

D018155