ADVANCE TABCO®
SMART FABRICATION™

STAINLESS STEEL

Ice Bins NSF

18” and 21” Wide Units

Item #: _____ Qty #: _____
Model #: _____
Project #: _____

SLI Series
18” Wide Units

CRI Series
21” Wide Units

NEW DESIGN FOR 2015

MATERIAL:

Ice Bin, Front Apron, Backsplash: 22 gauge, 300 stainless steel
Sides: 20 gauge, 430 stainless steel
Understructure: 22 gauge galvaneal front/back; 11 gauge electrogalvaneal leg channel
Legs: 1 5/8” O.D. 18 gauge, galvanized steel with adjustable plastic bullet feet
Ice Bin Insulation: 2 lbs. density styrofoam

MECHANICAL:

1” IPS drain.

FEATURES:

Insulated ice bins are 12” or 16” deep.
4” backsplash.
Two removable injection molded 3-pack plastic bottle racks.
Galvanized legs with adjustable plastic bullet feet.
Adjustable galvanized side cross-bracing.
CRI Series has rear deck for extra storage.

NOTE: Bottle Racks Must Be Removed For NSF Compliance & For Use With Optional Cover.

OPTIONAL:

SU-10B - 10” stainless steel leg upgrade (for 16” deep ice bins)
SU-10C - 14” stainless steel leg upgrade (for 12” deep ice bins)
SU-30 - Soda chase provision
SU-40 - Prep unit for installation of speed rail
SSC-12 - Sliding cover for 12” ice bin
SSC-24 - Sliding cover for 24” ice bin
SSC-30 - Sliding cover for 30” ice bin
SSC-36 - Sliding cover for 36” ice bin
SSC-42 - Sliding cover for 42” ice bin
SSC-48 - Sliding cover for 48” ice bin

Optional Sliding Stainless Steel Cover Shown

18” WIDE Model #	Approx. Weight	Approx. Cu. Ft.	21” WIDE Model #	Approx. Weight	Approx. Cu. Ft.	O.A. Length (A)	Dist. To Drain (B)	Ice Bin Depth (C)	O.A. Height of Bin (D)	O.A. Leg Height (E)	Ice Bin Capacity
SLI-12-12	26 lbs.	6	CRI-12-12	35 lbs.	6	12”	6”	12” DEEP	14”	14”	35 lbs.
SLI-12-24	52 lbs.	7	CRI-12-24	61 lbs.	8	24”	12”		14”	14”	77 lbs.
SLI-12-30	60 lbs.	11	CRI-12-30	69 lbs.	11	30”	15”		14”	14”	98 lbs.
SLI-12-36	68 lbs.	13	CRI-12-36	77 lbs.	13	36”	18”		14”	14”	119 lbs.
SLI-12-42	72 lbs.	13	CRI-12-42	81 lbs.	13	42”	21”		14”	14”	140 lbs.
SLI-12-48	87 lbs.	14	CRI-12-48	96 lbs.	14	48”	24”		14”	14”	161 lbs.
SLI-16-24	68 lbs.	7	CRI-16-24	75 lbs.	8	24”	12”	16” DEEP	18”	10”	100 lbs.
SLI-16-30	69 lbs.	12	CRI-16-30	76 lbs.	12	30”	15”		18”	10”	127 lbs.
SLI-16-36	70 lbs.	16	CRI-16-36	78 lbs.	17	36”	18”		18”	10”	155 lbs.

ADVANCE TABCO®
SMART FABRICATION™
www.advancetabco.com

Customer Service Available To Assist You 1-800-645-3166 8:30 am - 8:00 pm E.S.T.

For Orders & Customer Service:
Email: customer@advancetabco.com or **Fax:** 631-242-6900

For Smart Fabrication™ Quotes:
Email: smartfab@advancetabco.com or **Fax:** 631-586-2933

DIMENSIONS and SPECIFICATIONS

TOL Overall: ± .500” Interior: ± .250”

ALL DIMENSIONS ARE TYPICAL

SLI Series

NON-COLD PLATE ICE BINS

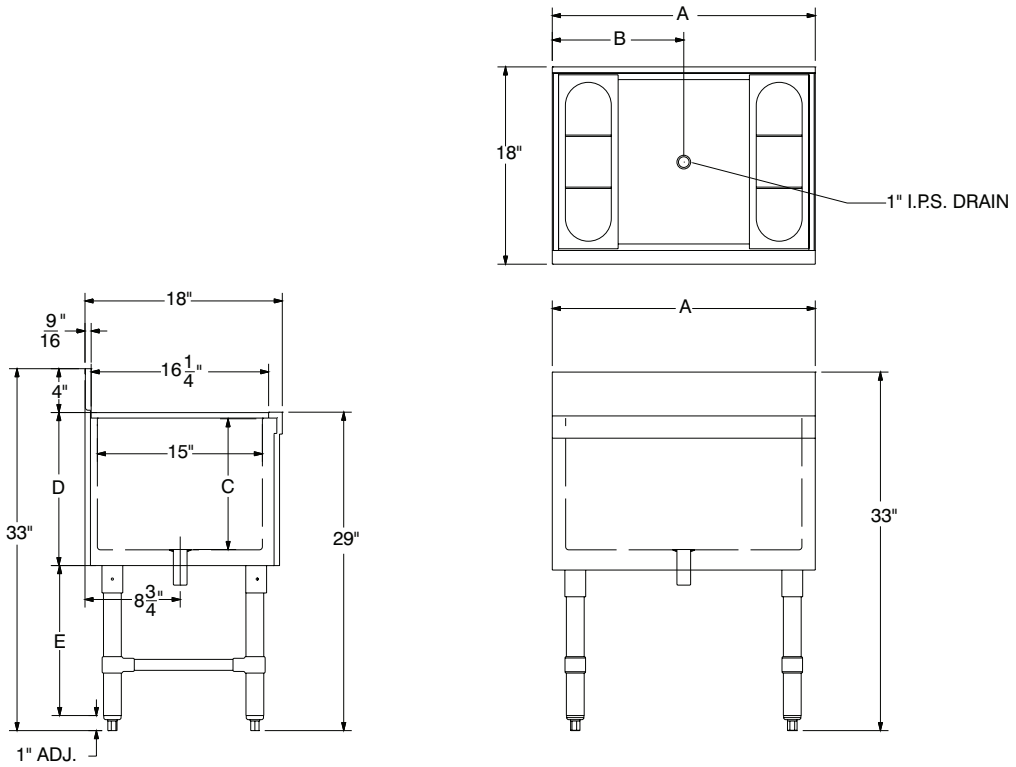

CRI Series

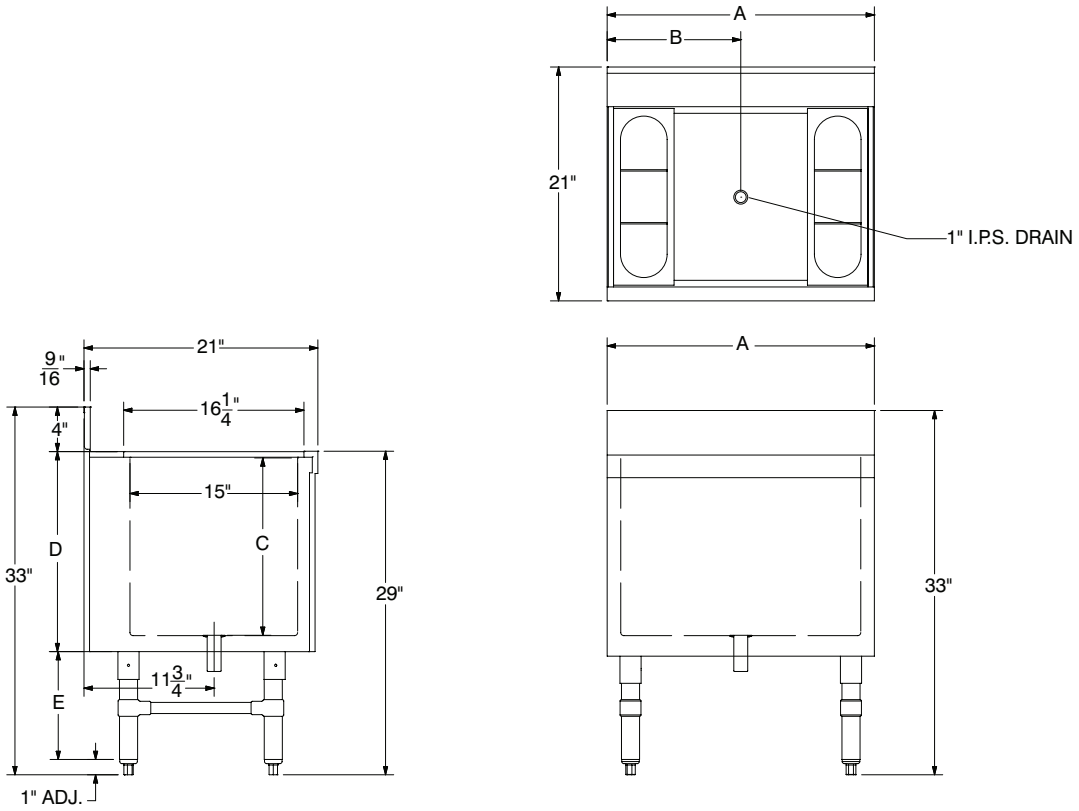

ADVANCE TABCO®
SMART FABRICATION™

REF-W

200 Heartland Boulevard, Edgewood, NY 11717-8380

ADVANCE TABCO is constantly engaged in a program of improving our products. Therefore, we reserve the right to change specifications without prior notice.

© ADVANCE TABCO, SEPTEMBER 2015