ADVANCE TABCO®
SMART FABRICATION™

PRESTIGE
Signature Series

# Bar Sinks NSF

## 20" and 25" Wide Units - Deep Drawn Bowls

Featuring **Deep Drawn** Seamless Bowls

**PRB Series with Drainboards Shown**
*20" Wide Units Include Splash Mount Faucet(s)*

**PRB-24 Series with Drainboards shown**
*25" Wide Units Include Deck Mount Faucet(s)*

Item #: _____ Qty #: _____
Model #: _____
Project #: _____

NEW DESIGN FOR 2015

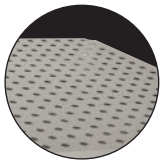

Featuring Perforated Drainboard

### FEATURES:

One piece **Deep Drawn** sink bowls measuring 10" x 14" x 10".
Removable perforated drainboard top.
Sound deadened.
7" backsplash.
Stainless steel top, apron, sides, legs & adjustable bullet feet.
Adjustable side cross-bracing
**PRB-24 Series** has rear deck for extra storage.

### MATERIAL:

20 gauge, 300 stainless steel
**Backsplash:** 18 gauge, 300 stainless steel
**Legs:** 1 5/8" O.D. 18 gauge, 300 stainless steel legs with 1" adjustable stainless steel bullet feet

### MECHANICAL:

**PRB-19 Series*:** Includes 4" O.C., splash mount swing spout faucet.
**PRB-24 Series*:** Includes 4" O.C., deck mount swing spout faucet.
***All faucets meet federal lead free standards.***
Each sink bowl includes 9" high overflow pipe with 1 1/2" IPS drain.

### OPTIONAL:

**K-316-LUHA -** Add wrist handles
**SU-20R or L -** Right or left side splash for 20" wide bar sinks
**SU-20RL -** Right and left side splash for 20" wide bar sinks
**SU-25R or L -** Right or left side splash for 25" wide bar sinks
**SU-25RL -** Right and left side splash for 25" wide bar sinks
**SU-74 -** All stainless steel construction upgrade
**SU-75 -** Add welded stainless steel side cross-bracing

**For More Accessories & Modifications, Visit Us At www.advancetabco.com.**

| | 20" WIDE Model # | Approx. Weight | Approx. Cu. Ft. | 25" WIDE Model # | Approx. Weight | Approx. Cu. Ft. | O.A. Length (L) | Drbd. Length (C) | Drbd. Drain Distance (A) | Drbd. Drain Distance (B) | # of Drainboards | Faucet Length |
|---|---|---|---|---|---|---|---|---|---|---|---|---|
| 1 COMP. | PRB-19-31C | 79 lbs. | 11 | PRB-24-31C | 89 lbs. | 12 | 36" | 12" | 6" | 10" | 2 | 6" |
| 2 COMP. | PRB-19-22C | 79 lbs. | 11 | PRB-24-22C | 89 lbs. | 8 | 24" | N/A | N/A | N/A | N/A | 6" |
| | PRB-19-32LorR | 79 lbs. | 11 | PRB-24-32LorR | 89 lbs. | 12 | 36" | 11" | 5.5 | 10" | 1 | 6" |
| | PRB-19-42LorR | 92 lbs. | 14 | PRB-24-42LorR | 105 lbs. | 16 | 48" | 23" | 11.5 | 10" | 1 | 6" |
| | PRB-19-42C | 92 lbs. | 14 | PRB-24-42C | 105 lbs. | 16 | 48" | 12" | 6 | 10" | 2 | 6" |
| 3 COMP. | PRB-19-33C | 92 lbs. | 14 | PRB-24-33C | 105 lbs. | 12 | 36" | N/A | N/A | N/A | N/A | 12" |
| | PRB-19-43LorR | 94 lbs. | 14 | PRB-24-43LorR | 107 lbs. | 16 | 48" | 11" | 6" | 10" | 1 | 12" |
| | PRB-19-53LorR | 109 lbs. | 18 | PRB-24-53LorR | 125 lbs. | 20 | 60" | 23" | 12" | 10" | 1 | 12" |
| | PRB-19-53C | 109 lbs. | 18 | PRB-24-53C | 125 lbs. | 20 | 60" | 12" | 6" | 10" | 2 | 12" |
| | PRB-19-63C | 125 lbs. | 21 | PRB-24-63C | 143 lbs. | 24 | 72" | 18" | 9" | 10" | 2 | 12" |
| | PRB-19-73C | 139 lbs. | 25 | PRB-24-73C | 190 lbs. | 42 | 84" | 24" | 12" | 10" | 2 | 12" |
| | PRB-19-83C | 153 lbs. | 28 | PRB-24-83C | 176 lbs. | 48 | 96" | 30" | 15" | 10" | 2 | 12" |
| 4 COMP. | PRB-19-44C* | 94 lbs. | 14 | PRB-24-44C* | 107 lbs. | 16 | 48" | N/A | N/A | N/A | N/A | 6" |
| | PRB-19-64C* | 125 lbs. | 21 | PRB-24-64C* | 147 lbs. | 24 | 72" | 12" | 6" | 10" | 2 | 6" |
| | PRB-19-74C* | 143 lbs. | 25 | PRB-24-74C* | 163 lbs. | 42 | 84" | 18" | 9" | 10" | 2 | 6" |
| | PRB-19-84C* | 157 lbs. | 28 | PRB-24-84C* | 178 lbs. | 48 | 96" | 24" | 12" | 10" | 2 | 6" |

***4 Comp. Bar Sinks Include Two 6" Swing Spout Faucets**

**L And R Indicate Sink Location.**


ADVANCE TABCO®
SMART FABRICATION™
www.advancetabco.com

**Customer Service Available To Assist You 1-800-645-3166 8:30 am - 8:00 pm E.S.T.**

**For Orders & Customer Service:**
**Email:** customer@advancetabco.com or **Fax:** 631-242-6900

**For Smart Fabrication™ Quotes:**
**Email:** smartfab@advancetabco.com or **Fax:** 631-586-2933

# DIMENSIONS and SPECIFICATIONS

TOL Overall: ± .500" Interior: ± .250"

ALL DIMENSIONS ARE TYPICAL

## PRB-19 Series

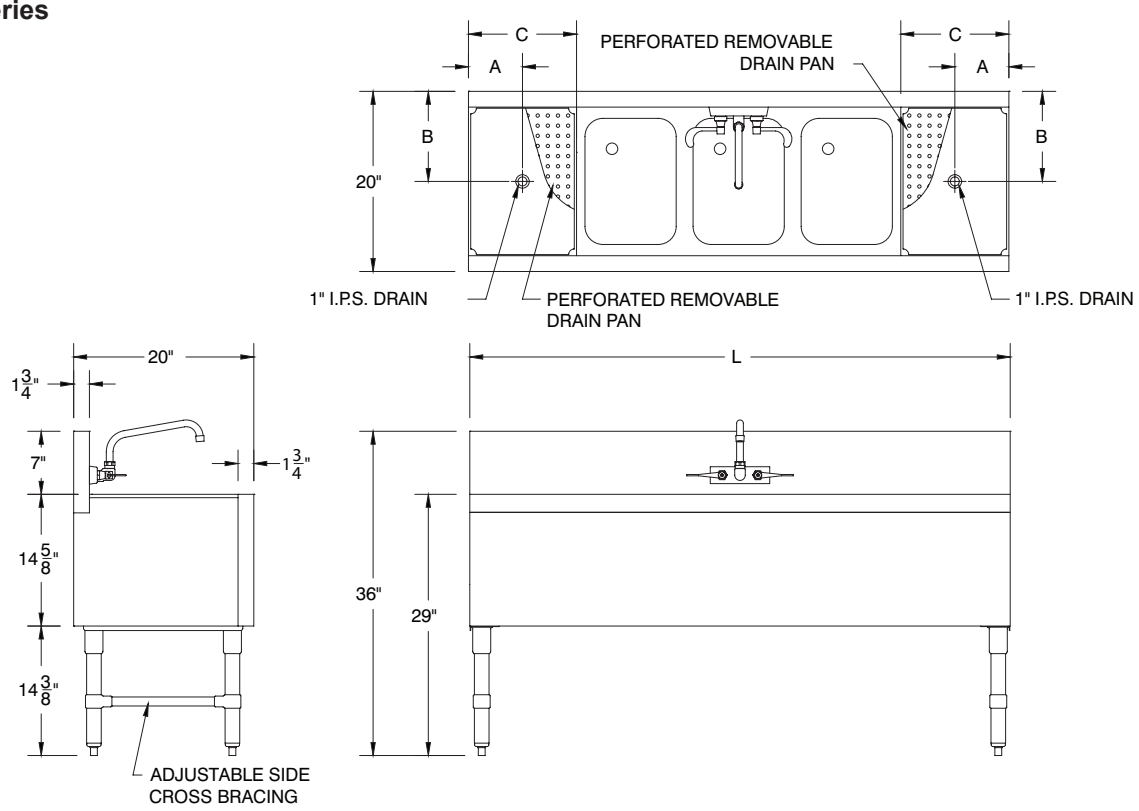


## PRB-24 Series

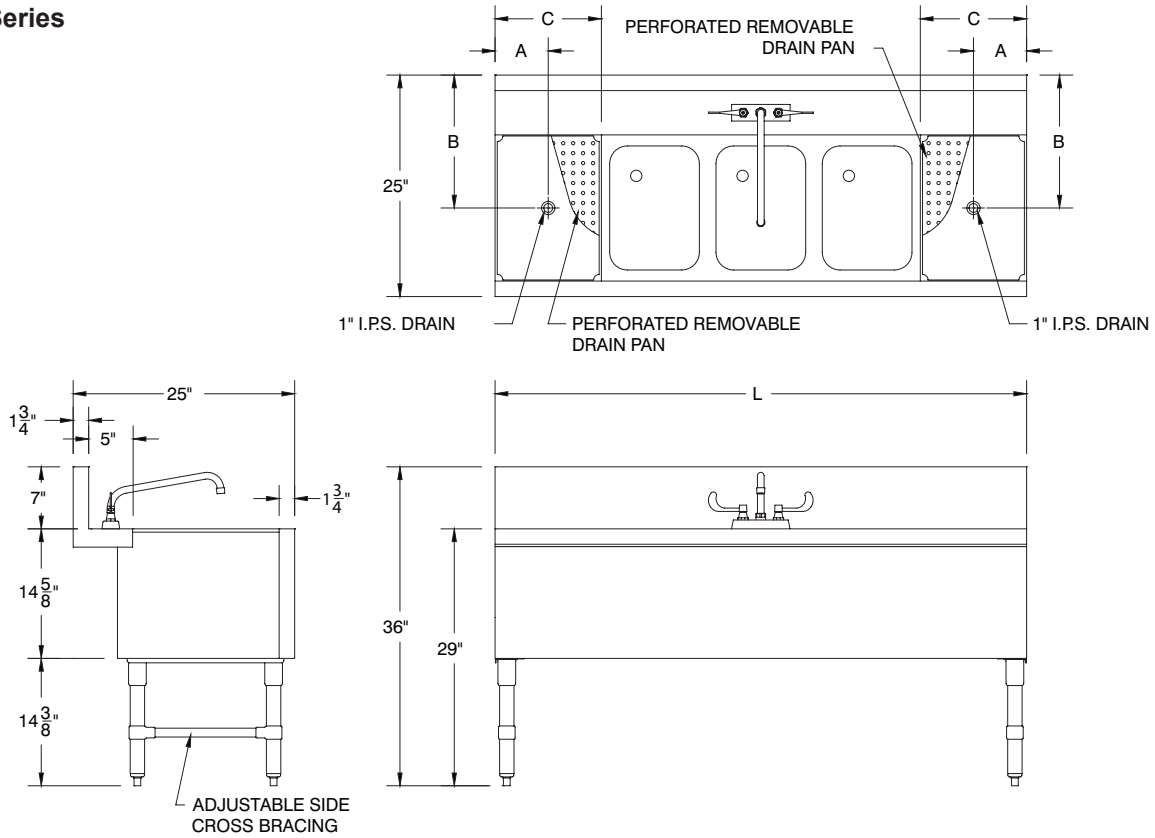


ADVANCE TABCO
SMART FABRICATION™

ADVANCE TABCO is constantly engaged in a program of improving our products. Therefore, we reserve the right to change specifications without prior notice.



200 Heartland Boulevard, Edgewood, NY 11717-8380

© ADVANCE TABCO, NOVEMBER 2016