ADVANCE TABCO®
SMART FABRICATION™

PRESTIGE
Signature Series

Drainboard Cabinets NSF

25” and 30” Wide Units

Item #: _____ Qty #: _____
Model #: _____
Project #: _____

FEATURES:

Sturdy stainless steel base cabinet
Removable perforated drainboard top.
Sound deadened.
Stainless steel legs with adjustable stainless steel bullet feet.
7” backsplash.
Removable hinged stainless steel doors (PRSCD Series)

MECHANICAL:

1” IPS drain

MATERIAL:

20 gauge, 300 stainless steel
Drainboard: 18 gauge, 300 stainless steel
Legs: 18 gauge 1 5/8” O.D. with 1” adjustable stainless steel bullet feet

OPTIONAL:

SU-27 - Add door lock
SU-77 - Modify to 20” wide Unit

TO ADD A MID-SHELF IN DRAINBOARD BASE
Add an “-M” after model number.
(For example, PRSCO-19-18 would read PRSCO-19-18-M)
ADD A SINK
SU-22A 10” x 14” x 10”
SU-22B 9-1/2” x 11-1/2” x 6”

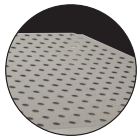

Removable Perforated Drainboard Top

Open Base
PRSCO-19-36 Shown

w/ Hinged Doors
PRSCD-24-36 Shown

25” WIDE Model #	Approx. Weight	Approx. Cu. Ft.	30” WIDE Model #	Approx. Weight	Approx. Cu. Ft.	O.A. Length (A)	Dist. To Drain (B)	Opening In Front (C)
Open Base								
PRSCO-19-12	48 lbs.	12	PRSCO-24-12	55 lbs.	15	12”	9 3/4”	11 3/4”
PRSCO-19-18	55 lbs.	12	PRSCO-24-18	62 lbs.	15	18”	15”	14”
PRSCO-19-24	62 lbs.	12	PRSCO-24-24	69 lbs.	15	24”	21”	20”
PRSCO-19-30	69 lbs.	15	PRSCO-24-30	76 lbs.	18	30”	27”	26”
PRSCO-19-36	75 lbs.	18	PRSCO-24-36	82 lbs.	22	36”	33”	32”
PRSCO-19-42	80 lbs.	21	PRSCO-24-42	90 lbs.	28	42”	39”	38”
PRSCO-19-48	85 lbs.	24	PRSCO-24-48	92 lbs.	30	48”	45”	44”
With Hinged Doors								
PRSCD-19-12	58 lbs.	12	PRSCD-24-12	65 lbs.	15	12”	9 3/4”	11 3/4”
PRSCD-19-18	65 lbs.	12	PRSCD-24-18	72 lbs.	15	18”	15”	14”
PRSCD-19-24	72 lbs.	12	PRSCD-24-24	79 lbs.	15	24”	21”	20”
PRSCD-19-30	79 lbs.	15	PRSCD-24-30	85 lbs.	18	30”	27”	26”
PRSCD-19-36	85 lbs.	18	PRSCD-24-36	92 lbs.	22	36”	33”	32”
PRSCD-19-42	90 lbs.	21	PRSCD-24-42	98 lbs.	28	42”	39”	38”
PRSCD-19-48	95 lbs.	24	PRSCD-24-48	102 lbs.	30	48”	45”	44”

ADVANCE TABCO®
SMART FABRICATION™
www.advancetabco.com

Customer Service Available To Assist You 1-800-645-3166 8:30 am - 8:00 pm E.S.T.

For Orders & Customer Service:
Email: customer@advancetabco.com or **Fax:** 631-242-6900

For Smart Fabrication™ Quotes:
Email: smartfab@advancetabco.com or **Fax:** 631-586-2933

DIMENSIONS and SPECIFICATIONS

TOL Overall: ± .500” Interior: ± .250”

ALL DIMENSIONS ARE TYPICAL

PRSCO-19 Series

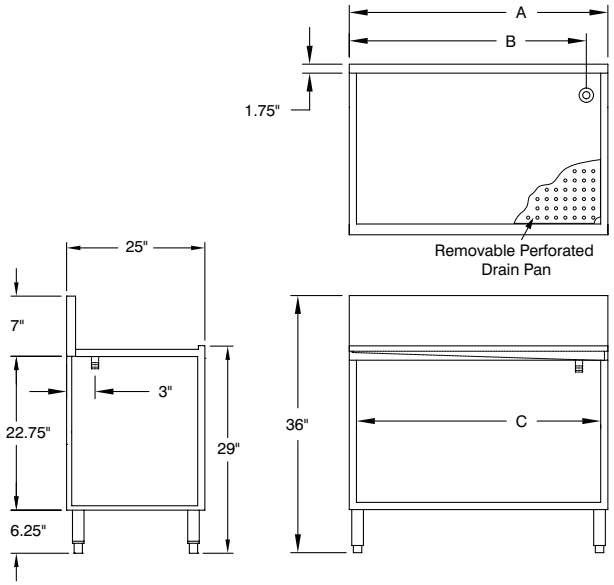

PRSCD-19 Series

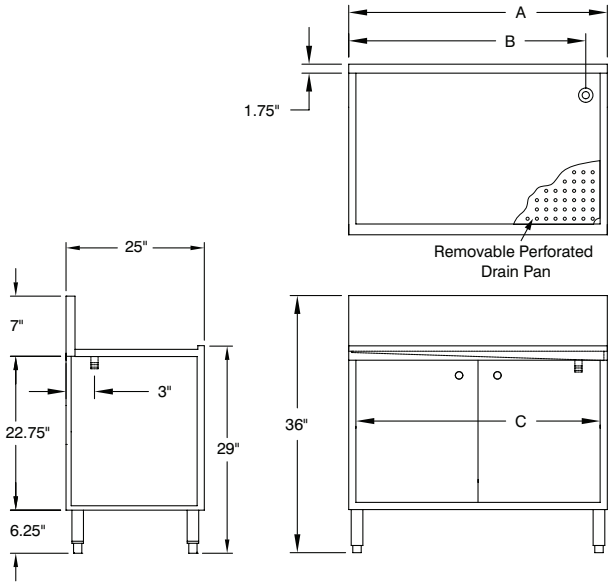

PRSCO-24 Series

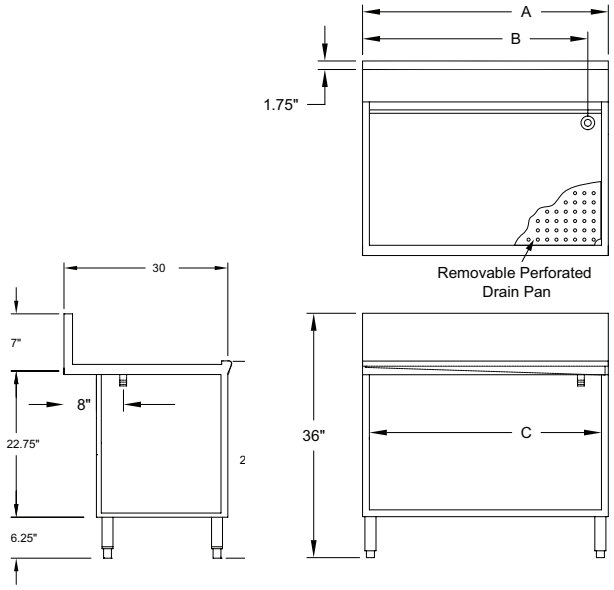

PRSCD-24 Series

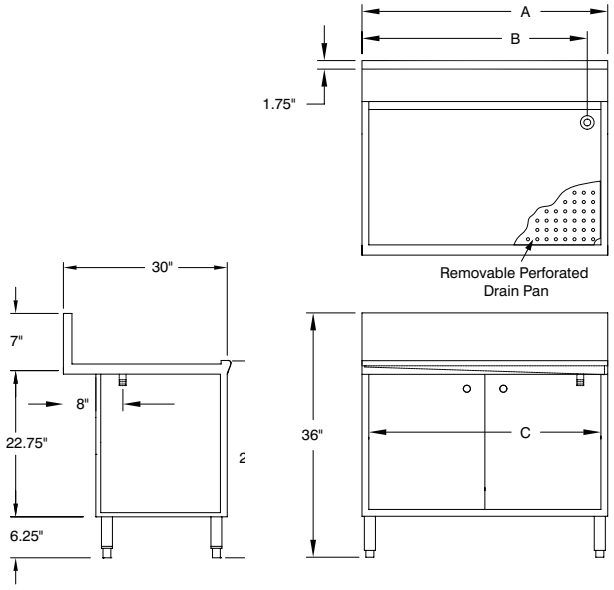

ADVANCE TABCO
SMART FABRICATION™

200 Heartland Boulevard, Edgewood, NY 11717-8380

REF-CC

ADVANCE TABCO is constantly engaged in a program of improving our products. Therefore, we reserve the right to change specifications without prior notice.

© ADVANCE TABCO, JANUARY 2016