Outperform every day.™

Project:

Item Number:

Quantity:

STANDARD REFRIGERATED COLD PAN DROP-INS

Standard Refrigerated Cold Pan Drop-in

DESCRIPTION

The modular drop-in standard (non-NSF7) refrigerated cold pans are designed for top-mount installation.

A full-perimeter drip edge contains spills and condensation within the stainless steel countertop area of the drop-in.

High-density polyurethane foam insulation surrounds the exterior of the well to provide most efficient performance with energy savings.

The deep display well is designed to accommodate standard 12" x 20" (30.5 x 50.8 cm) pans.

Refrigeration coils surround the exterior side walls of well for maximum cooling. Refrigerant is R134A to meet federal standards.

Cold drop-ins are best used for holding periods up to 4 hours. For best performance, stainless steel containers are recommended.

Note: Modular drop-ins cannot be cancelled or returned.

Agency Listings

c UL us LISTED

NSF

Note: Product has not been performance tested for potentially hazardous foods.

Due to continued product improvement, please consult www.vollrath.com for current product specifications.

MODELS

36490	One Pan	36444	Four Pan
36441	Two Pan	36446	Five Pan
36442	Three Pan	36448	Six Pan

FEATURES

- Top is 18-gauge stainless steel, 18-8 Type 304, with 3/8" (9.52 mm) overhang on all sides and die stamped with full-perimeter drip edge. Molded breaker gasket is fitted under the drip edge.
- Flat work surface around opening.
- Seamless well is 18-gauge 18-8 stainless Type 304.
- 1" (2.5 cm) integral drain is standard.
- Inner well assembly insulated with foamed in place polyurethane foam insulation.
- Condensing unit suspended below well.
- Temperature control on compressor.
- For complete air circulation, two openings in the cabinet are required.
- Exterior housing is 18-gauge galvanized steel.
- Optional perforated false bottom is nominal 1" (2.5 cm) high and constructed of 18-gauge Type 304 stainless steel. False bottom will reduce pan depth by same dimension.

False bottom options:

Drop-In Model	False Bottom Model
36490	70100
36441	36913-2
36442	36914-2
36444	36915-2
36446	36916-2
36448	98855-2

- Unit comes with 6 ft. (183 cm) cord and plug and does not require hard wiring.
- On/Off switch is mounted on side of compressor housing.
- Positioning clips provided to center drop-in within cutout.
- One-year parts and labor warranty. Additional four years on compressor.

WARRANTY: All models shown come with Vollrath's standard warranty against defects in materials and workmanship. For full warranty details, please refer to the Vollrath Equipment and Smallwares Catalog.

Approvals	Date

The Vollrath Company, L.L.C.
1236 North 18th Street
Sheboygan, WI 53081-3201 U.S.A.
Customer Service: 800.628.0830
Canada Customer Service: 800.695.8560
Main Fax: 800.752.5620 or 920.459.6573

Technical Services: 800.628.0832
Technical Services Fax: 920.459.5462

STANDARD REFRIGERATED COLD PAN DROP-INS

MODELS

36490	One Pan	36444	Four Pan
36441	Two Pan	36446	Five Pan
36442	Three Pan	36448	Six Pan

DIMENSIONS (inches (cm))

Opening cutout must have a 7/8" (2.2 cm) corner radius.

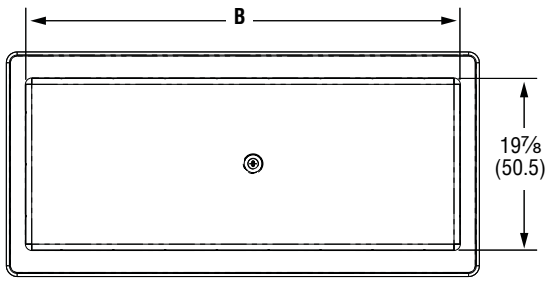

Top View

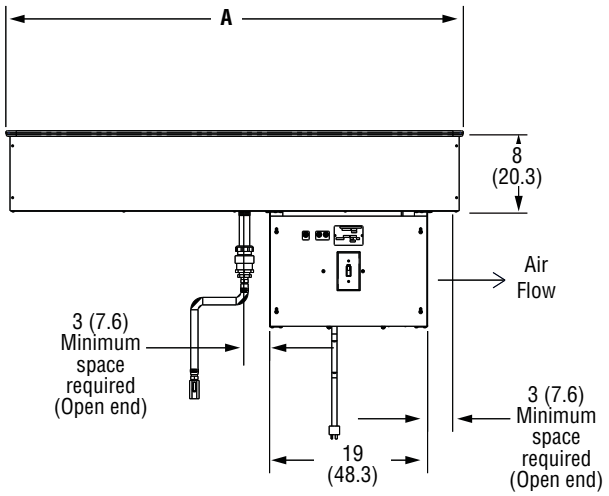

Front View

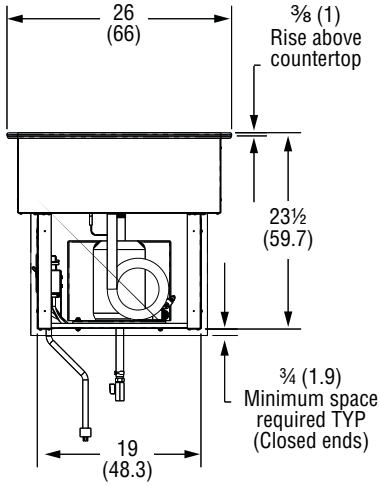

Side View

NOTE: For the One Pan Drop-in, the control switch is located on the side of the housing and not on the front as shown. Also, the drain is located within the housing.

SPECIFICATIONS

Item	(A) Overall Length	B Inside Length	Cutout Length	Cutout Width	Compressor	Voltage	Amps	Plug
36490	15 (38.1)	12 (30.4)	14¼ (36.2)	25¼ (64.1)	1/5 HP	120	3.8	NEMA 5-15P
36441	29 (73.7)	24¾ (62.9)	28¼ (71.8)	25¼ (64.1)	1/5 HP	120	3.8	NEMA 5-15P
36442	41½ (105.4)	37½ (95.3)	40¾ (103.5)	25¼ (64.1)	1/5 HP	120	3.8	NEMA 5-15P
36444	54¾ (139.1)	50¼ (127.6)	54 (137.2)	25¼ (64.1)	1/4 HP	120	4.9	NEMA 5-15P
36446	68 (172.7)	63 (160)	67¼ (170.8)	25¼ (64.1)	1/4 HP	120	4.9	NEMA 5-15P
36448	81¼ (206.4)	75¾ (192.4)	80½ (204.5)	25¼ (64.1)	1/3 HP	120	7.2	NEMA 5-20P

Receptacles

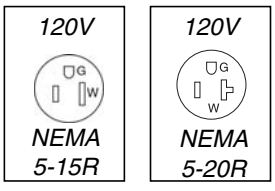

The Vollrath Company, L.L.C.

VOLLRATH®
Outperform every day.™

www.vollrath.com

The Vollrath Company, L.L.C.
1236 North 18th Street
Sheboygan, WI 53081-3201 U.S.A.
Customer Service: 800.628.0830
Canada Customer Service: 800.695.8560
Main Fax: 800.752.5620 or 920.459.6573

Technical Services: 800.628.0832
Technical Services Fax: 920.459.5462

© 2013 The Vollrath Company L.L.C. Form Number L35512 7/30/13
Printed in USA