ROYAL SERIES UNDERBAR
MULTI STATIONS

MODEL: _____ **PROJECT:** _____ **ITEM #:** _____ **QTY:** _____

PRODUCT IMAGE

KR18-M36R-8 SHOWN

AVAILABLE IN 1800 or 2100 SERIES

OPTIONAL ACCESSORIES

- **KR-101** Condiment Tray
- **KR-103** Stainless Steel Divider
- **KR-310** Right End Splash
- **KR-311** Left End Splash
- **KR-320** Partial Sliding Cover (Using Bottle Wells)
- **KR-321** Full Sliding Cover (No Bottle Wells)
- **KR-401** Cap Catcher and Opener
- **KR-406** Faucet installed over Ice Bin for Meltdown
- **KR-501** Towel Ring
- **KR-502** 15" Deep Liner on Ice Bin Section

STANDARD FEATURES

- **Interior**
  20 gauge stainless steel. 12" deep Ice Bin section. 10" deep Bottle section
- **Cold Plate**
  Cast aluminum post mix plate with 10 circuits. Plate is sealed into bottom. Each circuit is 5/16" OD stainless steel tubing. Two full with remainder to be half circuits. Bump and swedge fittings on ends
- **Front Apron**
  20 gauge stainless steel clad over 20 gauge galvanized steel
- **Sides**
  20 gauge stainless steel
- **Backsplash**
  20 gauge stainless steel
- **Back and Bottom**
  20 gauge galvanized steel
- **Legs**
  1 5/8" tubular 16 gauge stainless steel with grey plastic bullet foot
- **Tubing Access (Cold Plate)**
  1800 Series: 3/4" x 3 1/2" cutout in left side of backsplash
  2100 Series: 1/2" x 4.3" cutout in left side of backsplash
- **Insulation**
  Foamed-in-place polyurethane
- **Plumbing**
  Cold Plate: 1/2" IPS drain connection
  No Cold Plate: 1" IPS drain connection
- **NOTE: Cold Plate units supplied with 1/2" x 4" male threaded PVC tailpipe**

APPROVED BY:

CERTIFICATIONS:

Due to our commitment to continued product improvement, specifications are subject to change without notice.

Printed in the USA

Krowne Metal Corporation
100 Haul Rd. Wayne, NJ 07470 • Toll Free: (800) 631-0442 • Fax: (973) 872-1129
sales@krowne.com • www.krowne.com • www.facebook.com/KrowneMetal • www.twitter.com/KrowneMetal

Rev. 03/2012
No. 5.7

KaTom Restaurant Supply, Inc.

ROYAL SERIES UNDERBAR
MULTI STATIONS

MODEL: _____ **PROJECT:** _____ **ITEM #:** _____ **QTY:** _____

1800 SERIES

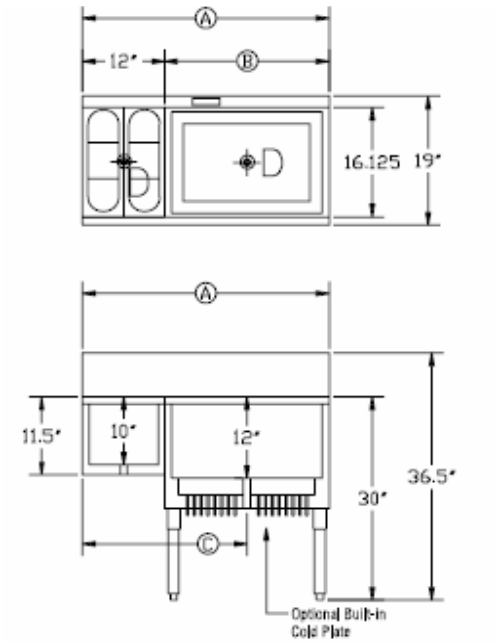

Model Numbers	Overall Length Ⓐ	Ice Bin Length Ⓑ	Ice Bin Location	Bottles Stored	Left Side to Ice Bin Drain Ⓒ	Ice Capacity (lbs.)	Cold Plate Circuits	Weight (lbs.)
KR18-M36R	3'-0"	24"	Right	6	24"	80	N/A	95
KR18-M36L	3'-0"	24"	Left	6	12"	80	N/A	95
KR18-M36R-10	3'-0"	24"	Right	6	24"	80	10	172
KR18-M36L-10	3'-0"	24"	Left	6	12"	80	10	172
KR18-M42R	3'-6"	30"	Right	6	27"	97	N/A	108
KR18-M42L	3'-6"	30"	Left	6	15"	97	N/A	108
KR18-M42R-10	3'-6"	30"	Right	6	27"	97	10	185
KR18-M42L-10	3'-6"	30"	Left	6	15"	97	10	185
KR18-M48C	4'-0"	24"	Center	12	24"	80	N/A	116
KR18-M48R	4'-0"	36"	Right	6	30"	115	N/A	116
KR18-M48L	4'-0"	36"	Left	6	18"	115	N/A	116
KR18-M48C-10	4'-0"	24"	Center	12	24"	80	10	193
KR18-M48R-10	4'-0"	36"	Right	6	30"	115	10	193
KR18-M48L-10	4'-0"	36"	Left	6	18"	115	10	193

MECHANICAL REQUIREMENTS: 1" IPS drain connection without Cold Plate. 1/2" IPS drain connection with Cold Plate.

2100 SERIES

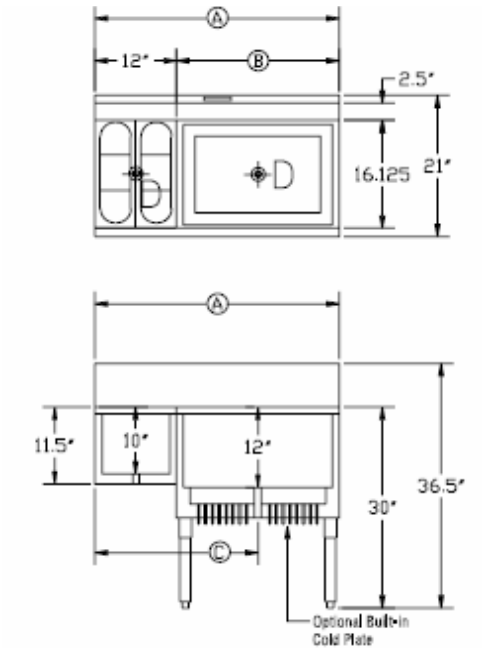

Model Numbers	Overall Length Ⓐ	Ice Bin Length Ⓑ	Ice Bin Location	Bottles Stored	Left Side to Ice Bin Drain Ⓒ	Ice Capacity (lbs.)	Cold Plate Circuits	Weight (lbs.)
KR21-M36R	3'-0"	24"	Right	6	24"	80	N/A	95
KR21-M36L	3'-0"	24"	Left	6	12"	80	N/A	95
KR21-M36R-10	3'-0"	24"	Right	6	24"	80	10	172
KR21-M36L-10	3'-0"	24"	Left	6	12"	80	10	172
KR21-M42R	3'-6"	30"	Right	6	27"	97	N/A	108
KR21-M42L	3'-6"	30"	Left	6	15"	97	N/A	108
KR21-M42R-10	3'-6"	30"	Right	6	27"	97	10	185
KR21-M42L-10	3'-6"	30"	Left	6	15"	97	10	185
KR21-M48C	4'-0"	24"	Center	12	24"	80	N/A	116
KR21-M48R	4'-0"	36"	Right	6	30"	115	N/A	116
KR21-M48L	4'-0"	36"	Left	6	18"	115	N/A	116
KR21-M48C-10	4'-0"	24"	Center	12	24"	80	10	193
KR21-M48R-10	4'-0"	36"	Right	6	30"	115	10	193
KR21-M48L-10	4'-0"	36"	Left	6	18"	115	10	193

MECHANICAL REQUIREMENTS: 1" IPS drain connection without Cold Plate. 1/2" IPS drain connection with Cold Plate.

APPROVED BY:

CERTIFICATIONS:

Due to our commitment to continued product improvement, specifications are subject to change without notice.

Printed in the USA

Krowne Metal Corporation
100 Haul Rd. Wayne, NJ 07470 • Toll Free: (800) 631-0442 • Fax: (973) 872-1129
sales@krowne.com • www.krowne.com • www.facebook.com/KrowneMetal • www.twitter.com/KrowneMetal

Rev. 03/2012
No. 5.7

KaTom Restaurant Supply, Inc.