MANITOWOC®

INDIGO®

300 Ice Cube Machine

Models

☐ ID-0302A ☐ IY-0304A ☐ ID-0303W ☐ IY-0305W

Indigo Series i-300
Ice Machine on D-400 Bin

Designed for operators who know that ice is critical to their business, the Indigo® Series ice machine's preventative diagnostics continually monitor itself for reliable ice production. Improvements in cleanability and programmability make your ice machine easy to own and less expensive to operate.

- **Space-Saving Design** – Measures only 16.5" high (42 cm) and 30" wide (76.20 cm) allowing it to fit on top of dispensers when a low ceiling is an issue.
- **Intelligent Diagnostics** – provide 24 hour preventative maintenance and diagnostic feedback for trouble free operation.
- **Acoustical Ice Sensing Probe** – for reliable operation in challenging water conditions.
- **EasyRead® Display** – communicates operating status, cleaning reminders, and asset information through a blue illuminated display.
- **Programmable Ice Production** – by On/Off Time, Ice Volume or Bin Level (with accessory bin level control) further improves energy efficiency and savings.
- **Easy to Clean Foodzone** – Hinged front door swings out for easy access. Removable water-trough, distribution tube, curtain, and sensing probes for fast and efficient cleaning. Select components made with AlphaSan® antimicrobial.
- **DuraTech™ Exterior** – provides superior corrosion resistance. Stainless finish with innovative clear-coat resists fingerprints and dirt.
- Available LuminIce® Growth Inhibitor mitigates the growth of bacteria and yeast within the foodzone.

COMMERCIAL WARRANTY
ICE MAKER 3 YEAR PARTS AND LABOR | EVAPORATOR 5 YEAR | COMPRESSOR 5 YEAR PARTS 3 YEAR LABOR

Ice Machine Electric

115/60/1 standard.
(208-230/60/1 and 230/50/1 also available.)

Minimum circuit ampacity:
Air-cooled: 10.8
Water-cooled: 10

Maximum fuse size:
15 amps *1ph*

Specifications

BTU Per Hour:
4,600 (average), 5,450 (peak)

Refrigerant:
R-404A CFC-free

Operating Limits:
- Ambient Temperature Range: 35˚ to 110˚F (1.7˚ to 43.3˚C)
  Water Temperature Range: 35˚ to 90˚F (1.7˚ to 32.2˚C)
- Water Pressure Ice Maker Water In:
  Min. 20 psi (137.9 kPA)
  Max. 80 psi (551.1 kPA)

Ice Shape

Half Dice
⅜" x 1⅛" x ⅞"
(.95 x 2.86 x 2.22 cm)

Dice
⅞" x ⅞" x ⅞"
(2.22 x 2.22 x 2.22 cm)

CALIFORNIA LOW LEAD QUALIFIED Conforms to NSF-61 Annex G | AHRI CERTIFIED | NSF c UL US LISTED | CE | AQ

COMPANY WITH QUALITY SYSTEM CERTIFIED BY DNV =ISO 9001:2008=

2110 South 26th Street
Manitowoc, WI 54220

Tel: 1.920.682.0161
Fax: 1.920.683.7589

www.manitowocice.com

WELBILT®

300 Ice Cube Machine

MANITOWOC®

Indigo® 300 Ice Cube Machine

i-300 Storage Bin

Installation Note

Water Cooled clearance:

Top/Sides: 8" (20.3 cm)
Back: 5" (12.7 cm)

Air Cooled clearance:

Top/Sides: 16" (40.6 cm)
Back: 5" (12.7 cm)

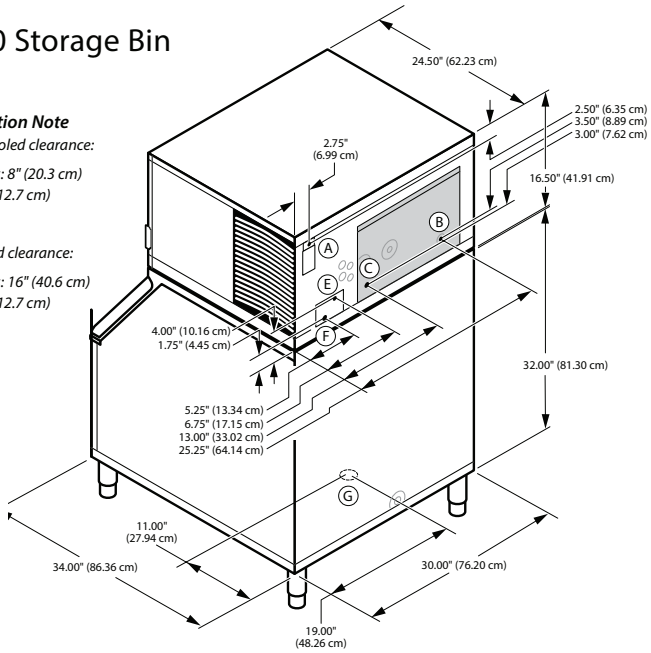

Ⓐ Electrical Entrance (2) Options
Ⓑ 3/8" (0.95 cm) F.P.T. Water Condenser Inlet (water-cooled units)
Ⓒ 1/2" (1.27 cm) F.P.T. Water Condenser Outlet (water-cooled units)
Ⓓ 1/2" (1.27 cm) Auxillary Base Drain Socket
Ⓔ 3/8" (0.95 cm) F.P.T. Ice Making Water Inlet
Ⓕ 1/2" (1.27 cm) F.P.T. Ice Making Water Drain
Ⓖ 3/4" (1.91 cm) Bin Drain

Space-Saving Designs

	i-300 B-400
Height	54.50" 138.43 cm
Width	30.00" 76.20 cm
Depth	34.00" 86.30 cm
Bin Storage	290 lbs. 131.50 kgs.

Height includes adjustable bin legs 6.00" to 8.00", (15.24 to 20.32 cm) set at 6.00" (15.24 cm).

Specifications

	Model	Ice Shape	Ice Production 24 Hours		Power Usage kWh/100 lbs. @90°Air/70°F	Water Usage/ 100 lbs. 45.4 kgs. of Ice
			70°Air/ 50°F Water	90°Air/ 70°F Water	1 Ph	Potable Water
AIR-COOLED	ID-0302A	dice	310 lbs.	225 lbs.	7.00	20.0 gal
			141 kgs.	102 kgs.		75.7 L
	IY-0304A	half-dice	310 lbs.	235 lbs.	7.00	20.0 gal
			141 kgs.	107 kgs.		75.7 L
WATER-COOLED	ID-0303W	dice	300 lbs.	260 lbs.	5.45	20.0 gal
			136 kgs.	118 kgs.		75.7 L
	IY-0305W	half-dice	300 lbs.	260 lbs.	5.45	20.0 gal
			136 kgs.	118 kgs.		75.7 L
	* Water-cooled Condenser Water Usage / 100 lbs. /45.4 kgs. Of Ice: 194 gal / 734 L . * Water-cooled models are excluded from ENERGY STAR qualification.					

Order ice storage bin separately.

Accessories

LuminIce® II Growth Inhibitor
reduces yeast and bacteria growth for a cleaner ice machine.

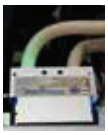

External Scoop holder
Protect the ice scoop with the NSF approved versatile scoop holder.

Arctic Pure® Water Filters
Reduces sediment and chlorine odors for better tasting ice.

iAuCS®
schedules and performs routine ice machine cleaning automatically.

Welbilt reserves the right to make changes to the design or specifications without prior notice.

2110 South 26th Street
Manitowoc, WI 54220

Tel: 1.920.682.0161
Fax: 1.920.683.7589

www.manitowocice.com

4767G 03/18

WELBILT®

MANITOWOC®

SPA-310 • SFA-291 Ice Dispensers

SPA-310 • SFA-291 Ice Dispensers

Model

☐ SPA-310 ☐ SFA-291

SPA Model

Designed for ice bucket filling in hotels, motels, and resorts

With Indigo and Indigo NXT ice machines you can program the ice machines to be off certain hours of the day so that while the hotel guests are sleeping, the ice machine can be too!

Indigo NXT iT0450 Ice Machine
SPA-310 Ice Dispenser

Indigo NXT iT0450 Ice Machine
SFA-291 Ice & Water Dispenser

SFA Model

Designed for "large" container ice filling.

Built-in water valve

Standard Features

- 180 lbs. (82 kgs.) ice storage capacity. Accepts 22" (55.88 cm) or 30" (76.2 cm) wide Manitowoc ice machine.
- Only 30" (76.2 cm) wide, 32" (81.28 cm) deep, and 82" high (208.28 cm).
- Patented rocking chute dispense mechanism reduces in-flight ice and ice spillage with quick on/off activation.
- Efficient built-in agitator assures 100% dispensing. Oversized drain pan collects larger quantity of ice overflow.
- DuraTech™ exterior provides superior corrosion resistance. Stainless finish with innovative clear-coat resists fingerprints and dirt.

Warranty

- 5-year parts and 5-year labor coverage on ice machine evaporator.
- 5-year parts and 3-year labor coverage on ice machine compressor.
- 3-year parts-and-labor coverage on all other ice machine and dispenser components.

Ice Shape

Half Dice
⅜" x 1⅛" x ⅞"
(.95 x 2.86 x 2.22 cm)

Dice
⅞" x ⅞" x ⅞"
(2.22 x 2.22 x 2.22 cm)

NSF c UL US LISTED CE AutoQuotes

COMPANY WITH QUALITY SYSTEM CERTIFIED BY DNV = ISO 9001:2008 =

Welbilt reserves the right to make changes to the design or specifications without prior notice.

2110 South 26th Street
Manitowoc, WI 54220

Tel: 1.920.682.0161
Fax: 1.920.683.7589

www.manitowocice.com
4359G 03/18

WELBILT®

MANITOWOC

SPA-310 • SFA-291 Ice Dispensers

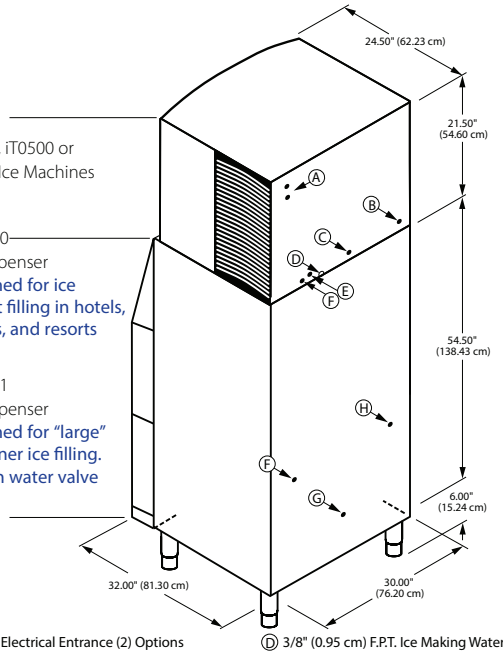

Ⓐ Electrical Entrance (2) Options
Ⓑ 3/8" (0.95 cm) F.P.T. Water Condenser Inlet (water-cooled units)
Ⓒ 1/2" (1.27 cm) F.P.T. Water Condenser Outlet (water-cooled units)
Ⓓ 3/8" (0.95 cm) F.P.T. Ice Making Water Inlet
Ⓔ 1/2" (1.27 cm) F.P.T. Ice Making Water Drain
Ⓕ Water Inlet: SFA-291 only
Ⓖ 1/2" (1.27 cm) F.P.T. Melting Tray Pan Drain Floor To Drain Distance = 13" (With 6" legs)
Ⓗ Dispenser Electrical Entrance

***Installation Note** - Dispensers have no minimum clearance, when installing an ice machine/ dispenser combination follow the clearance requirements for the ice machine being installed.*

Ice Machine Electric

Note: Dispenser will accept single 22" or 30" wide ice machine.* Ice machine ordered separately. Choose Dice or Half Dice cube size. Refer to ice machine specification sheet for electrical and complete AHRI standard ratings.

Dispenser Electric:
115/60/1. (208-230/60/1 and 230/50/1 also available.)

Maximum Circuit Fuse Size:
15.0 amps. HACR-type circuit breakers can be used in place of fuses.

Dispenser Electrical Connection:
6' power cord, rated 125 VAC, 16-3 conductors with standard 3-prong, straight-blade, ground-type plug (NEMA configuration 5-15P).

Motor:
1.6 amps maximum. Permanently lubricated.

Service Access:
Dispenser door removes easily to access components.

Model Options:
SPA-310 push-for-ice rocking chute, SFA-291 has a water valve option.
*22" wide ice machines on 30" wide dispensers require K-00365 Adapter & K-00348 Baffle.

Series iF0300 (115 volt)--Available June 2018

Model	Ice Shape	Ice Production 24 Hours			
		70°Air/50°F Water		90°Air/70°F Water	
		lbs.	kgs.	lbs.	kgs.
IDF0300A	dice	310	141	225	102
IDF0300W	dice	300	136	260	118
IYF0300A	half-dice	310	141	235	107
IYF0300W	half-dice	300	136	260	118

Series iT0500 (115 volt)

Model	Ice Shape	Ice Production 24 Hours			
		70°Air/50°F Water		90°Air/70°F Water	
		lbs.	kgs.	lbs.	kgs.
IDT0500A	dice	520	236	400	181
IDT0500W	dice	500	227	400	181
IYT0500A	half-dice	550	249	440	200
IYT0500W	half-dice	535	243	460	209

Series iT0500 (115 volt)

Model	Ice Shape	Ice Production 24 Hours			
		70°Air/50°F Water		90°Air/70°F Water	
		lbs.	kgs.	lbs.	kgs.
IDT0450A	dice	470	213	358	162
IDT0450W	dice	430	195	360	163
IYT0450A	half-dice	490	222	378	171
IYT0450W	half-dice	470	213	420	191

Series iF0600 (208-230 volt) -- Available June 2018

Model	Ice Shape	Ice Production 24 Hours			
		70°Air/50°F Water		90°Air/70°F Water	
		lbs.	kgs.	lbs.	kgs.
IDF0600A	dice	632	287	490	222
IDF0600W	dice	661	300	575	261
IYF0600A	half-dice	635	288	555	252
IYF0600W	half-dice	700	318	580	263

LuminIce® II Growth Inhibitor
reduces yeast and bacteria growth for a cleaner ice machine.

ArcticPure® Water Filters

AR-Pre
filters, dirt, rust and sediment.

AR-10000
reduces: scale, chlorine taste, and odor. Ice looks and tastes better.

©2018 Welbilt, Inc.

2110 South 26th Street
Manitowoc, WI 54220

Tel: 1.920.682.0161
Fax: 1.920.683.7589

www.manitowocice.com
4359G 03/18

WELBILT