John BOOS
Since 1887

ITEM #: _____ QTY: _____
MODEL #: _____
PROJECT NAME: _____

071117

3601 S. Banker St. Effingham, IL 62401 • P.O. BOX 609 • Ph: (888) 431-2667 • Fax: (800) 433-2667

"E3S8-2D" - 3 COMPARTMENT "E-SERIES" SINKS

WITH TWO DRAIN BOARDS AND GALVANIZED LEGS

FEATURES:

- 18GA STAINLESS STEEL
- TYPE 300 STAINLESS STEEL WITH #4 POLISH, SATIN FINISH
- 12" AND T14" DEEP BOWLS
- ALL CORNERS, BOTH VERTICAL AND HORIZONTAL, COVED AT 3/4" RADIUS
- BOTTOMS OF BOWLS FORMED FOR DRAINAGE TO 3-1/2" DIAMETER DIE STAMPED OPENING
- FULL LENGTH **10" HIGH BOXED BACKSPLASH,** WITH 2" RETURN TO WALL AT 45 DEGREE AND 1" TILE EDGE
- 1" FAUCET HOLES IN BACKSPLASH
- ALL OUTSIDE CORNERS OF ASSEMBLY ARE BULLNOSED TO PROVIDE SAFE, CLEAN, AND POLISHED EDGE
- STANDARD STAINLESS STEEL LEGS 1-5/8" DIAMETER

CONSTRUCTION:

- TOP: STAINLESS STEEL SINKS ARE TIG WELDED, EXPOSED WELDS ARE POLISHED TO MATCH ADJACENT SURFACE
- BASE: GALVANIZED BASE

MATERIAL:

- BOWLS & TOP: 18GA TYPE 300 STAINLESS STEEL WITH #4 POLISH, SATIN FINISH
- LEGS: 1-5/8" ROUND O.D. GALVANIZED STEEL
- GUSSETS: GALVANIZED STEEL
- FEET: 1" ADJUSTABLE PLASTIC BULLET FEET

E3S8-24-14

10" DEEP - 3 COMP SINKS - 18GA

MODEL	BOWL SIZE (LxWxD)	QTY
E3S8-1014-10T15	10" X 14" X 10"	

12" DEEP - 3 COMP SINKS - 18GA

MODEL	BOWL SIZE (LxWxD)	QTY
E3S8-1220-12T12	12" X 20" X 12"	
E3S8-1416-12-T12	14" X 16" X 12"	
E3S8-1620-12T18	16" X 20" X 12"	
E3S8-18-12T18	18" X 18" X 12"	

14" DEEP - 3 COMP SINKS - 18GA

MODEL	BOWL SIZE (LxWxD)	QTY
E3S8-15-14T15	15" X 15" X 14"	
E3S8-1620-14T18	16" X 20" X 14"	
E3S8-18-14T18	18" X 18" X 14"	
E3S8-18-14T24	18" X 18" X 14"	
E3S8-1824-14T24	18" X 24" X 14"	
E3S8-24-14T24 *	24" X 24" X 14"	
E3S8-2030-14T24	20" X 30" X 14"	

* WITH TWO SETS OF FAUCET HOLES

DETAILED SPECIFICATIONS

10" DEEP - SINK DIMENSIONS

A	B	C	D
12"	10"	10"	43-3/4"

12" DEEP - SINK DIMENSIONS

A	B	C	D
14-1/4"	12"	10"	43-3/4"

14" DEEP - SINK DIMENSIONS

A	B	C	D
16-1/4"	14"	10"	43-3/4"

BOWL DIMENSIONS

LENGTH x WIDTH	F	G	H	L
10" X 14"	19-1/2"	14"	7-15/16"	60"
12" X 20"	25-1/2"	20"	12-15/16"	60"
14" X 16"	21-1/2"	16"	10-15/16"	66"
15" X 15"	20-1/2"	15"	10-7/16"	75"
16" X 20"	25-1/2"	20"	12-15/16"	84"
18" X 18"	23-1/2"	18"	11-15/16"	90"
18" X 18" *	23-1/2"	18"	11-15/16"	102"
18" X 24"	29-1/2"	24"	14-15/16"	102"
24" X 24'	29-1/2"	24"	14-15/16"	120"
20" X 30"	35-1/2"	30"	17-15/16"	108"

* 24" DRAIN BOARD

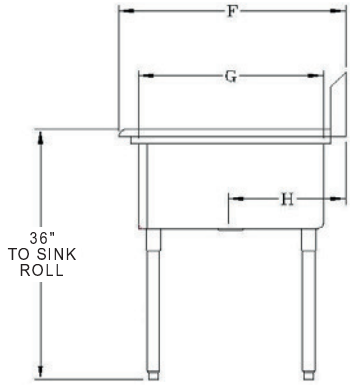

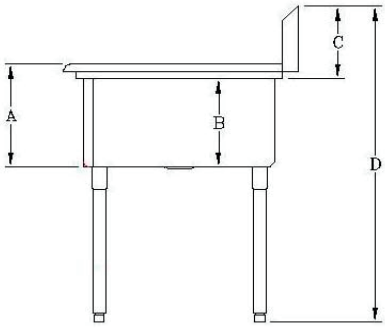

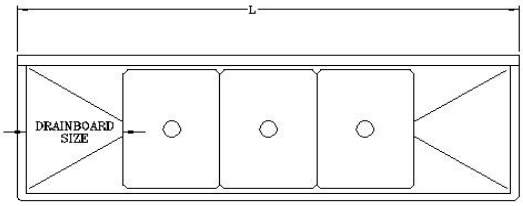

10" DEEP - 3 COMP SINKS - 18GA

MODEL	BOWL SIZE (LxWxD)	DIMENSIONS	DRAIN BOARDS	WT. (LBS)
E3S8-1014-10T15	10" X 14" X 10"	60" X 19-1/2"	15"	61

12" DEEP - 3 COMP SINKS - 18GA

MODEL	BOWL SIZE (LxWxD)	DIMENSIONS	DRAIN BOARDS	WT. (LBS)
E3S8-1220-12T12	12" X 20" X 12"	60" X 25-1/2"	12"	78
E3S8-1416-12-T12	14" X 16" X 12"	66" X 21-1/2"	12"	75
E3S8-1620-12T18	16" X 20" X 12"	84" X 25-1/2"	18"	95
E3S8-18-12T18	18" X 18" X 12"	90" X 23-1/2"	18"	95

14" DEEP - 3 COMP SINKS - 18GA

MODEL	BOWL SIZE (LxWxD)	DIMENSIONS	DRAIN BOARDS	WT. (LBS)
E3S8-15-14T15	15" X 15" X 14"	75" X 20-1/2"	15"	83
E3S8-1620-14T18	16" X 20" X 14"	84" X 25-1/2"	18"	100
E3S8-18-14T18	18" X 18" X 14"	90" X 23-1/2"	18"	101
E3S8-18-14T24	18" X 18" X 14"	102" X 23-1/2"	24"	107
E3S8-1824-14T24	18" X 24" X 14"	102" X 29-1/2"	24"	123
E3S8-24-14T24 *	24" X 24" X 14"	120" X 29-1/2"	24"	140
E3S8-2030-14T24	20" X 30" X 14"	108" X 35-1/2"	24"	145

* WITH TWO SETS OF FAUCET HOLES

SOME UNITS SHIP UNASSEMBLED FOR REDUCED SHIPPING COST. ALL DIMENSIONS ARE TYPICAL. TOLERANCE +/- .500"

John Boos & Co. is constantly engaged in a program of improving products and therefore reserves the right to change specifications without prior notice.