John BOOS
Since 1887

ITEM #: _____ QTY: _____
MODEL #: _____
PROJECT NAME: _____

101818

3601 S. Banker St. Effingham, IL 62401 • P.O. BOX 609 • Ph: (888) 431-2667 • Fax: (800) 433-2667

"ST6R5-GSK" STAINLESS STEEL TOP WORK TABLES

16GA TOP W/ 5" RISER AND GALV LEGS AND ADJUSTABLE UNDERSHELF

FEATURES:

- 16 GAUGE STAINLESS STEEL TOP W/ 5" RISER & TURNDOWN
- TYPE 300 STAINLESS STEEL WITH # 4 POLISH, SATIN FINISH
- TOP IS SOUND DEADENED
- REINFORCED WITH 1"X2" CHANNEL RUNNING ENTIRE LENGTH OF TABLE
- 1-1/2" STALLION EDGE ON FRONT SIDE EDGES
  90 DEGREE BEND DOWN FOR TABLE LINE-UP
- GALVANIZED BASE WITH ADJUSTABLE UNDERSHELF
- SHIPPED KNOCKED-DOWN, EASY-TO-ASSEMBLE
- NSF AND CSA CERTIFIED

ST6R5-3048GSK

CONSTRUCTION:

- TOP: STAINLESS STEEL TOPS ARE TIG WELDED, EXPOSED WELDS ARE POLISHED TO MATCH ADJACENT SURFACE.

MATERIAL:

- TOP: 16 GAUGE STAINLESS STEEL TYPE 300 STAINLESS STEEL WITH # 4 POLISH, SATIN FINISH
- SHELF: 18 GAUGE GALVANIZED STEEL,
  (36" WIDE TABLES, 16 GAUGE LOWER SHELF)
- LEGS: 1-5/8" ROUND O.D. 16 GAUGE TUBULAR GALVANIZED STEEL
- GUSSETS: GALVANIZED STEEL
- FEET: 1" ADJUSTABLE STAINLESS STEEL BULLET FEET

ADJUSTABLE SHELF

16 GAUGE TOP W/ ADJUSTABLE SHELF

24" WIDE	QTY	30" WIDE	QTY	36" WIDE	QTY
ST6R5-2430GSK		ST6R5-3024GSK		ST6R5-3624GSK	
ST6R5-2430GSK		ST6R5-3030GSK		ST6R5-3630GSK	
ST6R5-2436GSK		ST6R5-3036GSK		ST6R5-3636GSK	
ST6R5-2448GSK		ST6R5-3048GSK		ST6R5-3648GSK	
ST6R5-2460GSK		ST6R5-3060GSK		ST6R5-3660GSK	
ST6R5-2472GSK		ST6R5-3072GSK		ST6R5-3672GSK	
ST6R5-2484GSK		ST6R5-3084GSK		ST6R5-3684GSK	
ST6R5-2496GSK		ST6R5-3096GSK		ST6R5-3696GSK	
ST6R5-24108GSK		ST6R5-30108GSK		ST6R5-36108GSK	
ST6R5-24120GSK		ST6R5-30120GSK		ST6R5-36120GSK	
ST6R5-24132GSK		ST6R5-30132GSK		ST6R5-36132GSK	
ST6R5-24144GSK		ST6R5-30144GSK		ST6R5-36144GSK	

OPTIONAL ACCESSORIES

DESCRIPTION	MODEL #	QTY
DRAWER		
DRAWER LOCK		
CASTERS		
OVERSHELVES		
SINKS		
POT RACK		

DETAILED SPECIFICATIONS

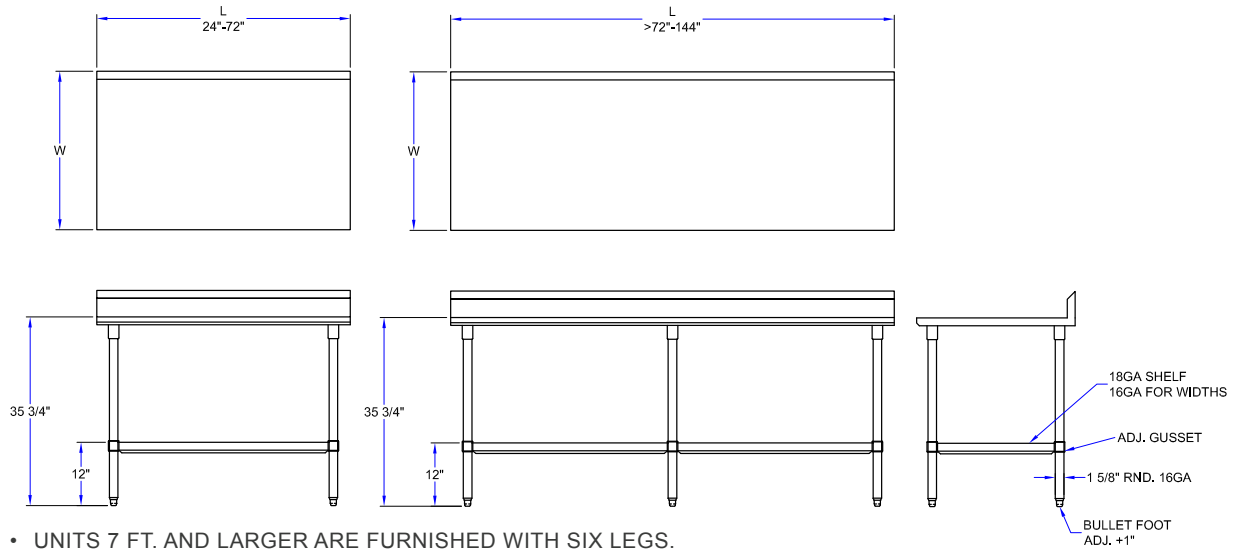

- UNITS 7 FT. AND LARGER ARE FURNISHED WITH SIX LEGS.
- FINISHED SIZE OF UNDERSHELF.
  SHELF LENGTH = LENGTH MINUS 4.875”
  SHELF WIDTH = WIDTH MINUS 4.25

16 GAUGE TOP W/ ADJUSTABLE UNDERSHELF

LENGTH	24" WIDE	WT. (LBS)	30” WIDE	WT. (LBS)	36” WIDE	WT. (LBS)
24"	ST6R5-2424GSK	44	ST6R5-3024GSK	49	ST6R5-3624GSK	58
30"	ST6R5-2430GSK	49	ST6R5-3030GSK	54	ST6R5-3630GSK	68
36"	ST6R5-2436GSK	55	ST6R5-3036GSK	62	ST6R5-3636GSK	75
48"	ST6R5-2448GSK	67	ST6R5-3048GSK	77	ST6R5-3648GSK	93
60"	ST6R5-2460GSK	80	ST6R5-3060GSK	91	ST6R5-3660GSK	111
72"	ST6R5-2472GSK	92	ST6R5-3072GSK	105	ST6R5-3672GSK	129
84"	ST6R5-2484GSK	111	ST6R5-3084GSK	127	ST6R5-3684GSK	159
96"	ST6R5-2496GSK	123	ST6R5-3096GSK	142	ST6R5-3696GSK	1777
108"	ST6R5-24108GSK	136	ST6R5-30108GSK	155	ST6R5-36108GSK	193
120"	ST6R5-24120GSK	147	ST6R5-30120GSK	170	ST6R5-36120GSK	211
132"	ST6R5-24132GSK	159	ST6R5-30132GSK	184	ST6R5-36132GSK	228
144"	ST6R5-24144GSK	171	ST6R5-30144GSK	199	ST6R5-36144GSK	246

MODEL # STRUCTURE

24 = WIDTH OF WORK SURFACE
5 = HT. OF RISER W/ TURNDOWN
R = RISER TOP WORK TABLE
6 = 16GA WORK SURFACE
ST = STAINLESS STEEL TOP

30 = LENGTH OF WORK SURFACE
GS = GALVANIZED LEGS & SHELF
K = K.D. W/ ADJUSTABLE BRACING

ST6R5-2430GSK

SOME UNITS SHIP UNASSEMBLED FOR REDUCED SHIPPING COST. ALL DIMENSIONS ARE TYPICAL. TOLERANCE +/- .500"
John Boos & Co. is constantly engaged in a program of improving products and therefore reserves the right to change specifications without prior notice.