John BOOS
Since 1887

ITEM #: _____ QTY: _____
MODEL #: _____
PROJECT NAME: _____

063017

3601 S. Banker St. Effingham, IL 62401 • P.O. BOX 609 • Ph: (888) 431-2667 • Fax: (800) 433-2667

"UFBLS" STAINLESS STEEL TOP WORK TABLES

18GA TOP W/1-1/2" REAR RISER AND STAINLESS LEGS AND ADJUSTABLE UNDERSHELF

BUDGET E-SERIES

UFBLS4830

FEATURES:

- 18 GAUGE STAINLESS STEEL TOP W/1-1/2" REAR RISER
- TYPE 430 STAINLESS STEEL WITH SATIN FINISH
- TOP IS SOUND DEADENED
- REINFORCED WITH 1"X2" CHANNEL RUNNING ENTIRE LENGTH OF TABLE
- 1-1/2" STALLION EDGE ON FRONT AND REAR WITH SIDE EDGES 90 DEGREE BEND DOWN FOR TABLE LINE-UP
- STAINLESS STEEL BASE AND ADJUSTABLE UNDERSHELF
- SHIPPED KNOCKED-DOWN, EASY-TO-ASSEMBLE
- NSF CERTIFIED

CONSTRUCTION:

- TOP: STAINLESS STEEL TOPS ARE TIG WELDED, EXPOSED WELDS ARE POLISHED TO MATCH ADJACENT SURFACE.

MATERIAL:

- TOP: 18 GAUGE STAINLESS STEEL TYPE 430 STAINLESS STEEL WITH SATIN FINISH
- SHELF: 18 GAUGE STAINLESS STEEL
- LEGS: 1-5/8" ROUND O.D. 16 GAUGE TUBULAR STAINLESS STEEL
- GUSSETS: STAINLESS STEEL
- FEET: 1" ADJUSTABLE PLASTIC BULLET FEET

ADJUSTABLE SHELF

18 GAUGE TOP W/ ADJUSTABLE SHELF

18" WIDE	QTY	24" WIDE	QTY	30" WIDE	QTY
UFBLS2418		UFBLS2424		-	
UFBLS3018		UFBLS3024		UFBLS3030	
UFBLS3618		UFBLS3624		UFBLS3630	
UFBLS4818		UFBLS4824		UFBLS4830	
UFBLS6018		UFBLS6024		UFBLS6030	
UFBLS7218		UFBLS7224		UFBLS7230	
UFBLS9618		UFBLS9624		UFBLS9630	

DETAILED SPECIFICATIONS

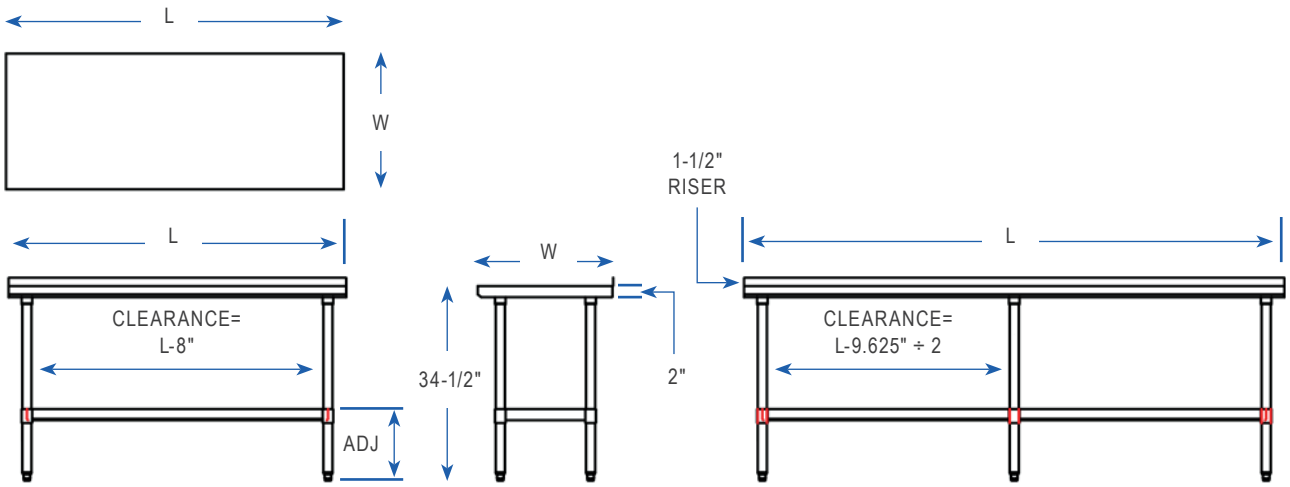

- UNITS 7 FT. AND LARGER ARE FURNISHED WITH SIX LEGS.
- FINISHED SIZE OF UNDERSHELF.
  SHELF LENGTH = LENGTH MINUS 4.875”
  SHELF WIDTH = WIDTH MINUS 4.25”

18 GAUGE TOP W/ ADJUSTABLE UNDERSHELF

LENGTH	18” WIDE	WT. (LBS)	24” WIDE	WT. (LBS)	30” WIDE	WT. (LBS)
24"	UFBLS2418	35	UFBLS2424	40	-	-
30"	UFBLS3018	38	UFBLS3024	45	UFBLS3030	50
36"	UFBLS3618	41	UFBLS3624	50	UFBLS3630	56
48"	UFBLS4818	44	UFBLS4824	62	UFBLS4830	69
60"	UFBLS6018	47	UFBLS6024	71	UFBLS6030	82
72"	UFBLS7218	50	UFBLS7224	83	UFBLS7230	94
96"	UFBLS9618	56	UFBLS9624	111	UFBLS9630	128

SOME UNITS SHIP UNASSEMBLED FOR REDUCED SHIPPING COST. ALL DIMENSIONS ARE TYPICAL. TOLERANCE +/- .500"

John Boos & Co. is constantly engaged in a program of improving products and therefore reserves the right to change specifications without prior notice.