Garland

Master Electric Convection Oven

Item: _____

Quantity: _____

Project: _____

Approval: _____

Date: _____

Master Electric Convection Oven

Models:

☐ MCO-ES-10-S ☐ MCO-ES-20-S ☐ MCO-ED-10-S ☐ MCO-ED-20-S

Model MCO-ES-10-S

Standard Features:

- Master 200 Solid State Control with 150° F (66°C) to 500°F (260°C) temperature range and electromechanical timer
- 2-speed fan control (high & low) w/3/4HP fan motor
- Total of 10.4 kW loading per oven cavity
- Stainless steel front, sides, top, and legs
- 60/40 dependent door design with double pane thermal window in both doors and interior lighting
- Full Length, stainless steel positive door closure
- Patented "Safety Door System"
- Porcelain enameled oven interior with coved corners
- 24" cooking cavity height w/6 chrome plated oven racks on 13-position rack guides
- 1 year limited parts & labor warranty (USA & Canada only)
- 5 year limited door warranty, excluding window (USA & Canada only)
- 2 year limited parts & 1 year labor warranty (USA only)
- 2 year limited parts & labor warranty (USA Kindergarden to Grade 12 schools only) • 5 year limited door warranty, excluding window•

Optional Features:

☐ Window in left hand door w/ interior lighting
☐ Stainless steel solid doors
☐ Stainless steel oven interior
☐ Extra oven racks
☐ 4 swivel casters w/front brakes
☐ Low profile casters w/front brakes (double ovens only)
☐ Open base with rack guides & shelf (stainless steel)
☐ Back enclosure (stainless steel)
☐ 460 volt, 3 phase
☐ 50 cycle components
☐ Maximum security package

Specifications:

Garland Master full-size standard depth or deep depth (Prefix MCO-ED) electric convection oven. 10.4 kW/ oven cavity, 3/4 HP fan motor with two speed fan control. Master 200 Solid State control. Porcelain enameled oven interior with coved corners, Six (6) oven racks and 13-position rack guides. Interior measures 29"(736mm) W x 24" (610mm) H x 24" (610mm) D for standard depth and 29" (736mm) W x 24" (610mm) H x 28" (610mm) D for deep depth. Stainless steel front, sides, top and legs. 60/40 dependent door design with double pane thermal window in both doors and interior lighting. Models with suffix 20-S are double decked. Specify voltage and phase. UL, CUL and NSF Listed.

NOTE: Ovens suppled with casters must be installed with an approved restraining device.

Garland Commercial Ranges Ltd
1177 Kamato Road,
Mississauga, Ontario
L4W 1X4 CANADA

General Inquires 1-905-624-0260
USA Sales, Parts and Service 1-800-424-2411
Canadian Sales 1-888-442-7526
Canada or USA Parts/Service 1-800-427-6668

Manitowoc

Garland

Master Electric Convection Oven

Model	Interior Demension (per oven)			Exterior Dimension			Ship Wt./Size	
	W:In(mm)	H:In(mm)	D:In(mm)	W:In(mm)	H:In(mm)	D:In(mm)	Lbs./Kg	Cu Ft
MCO-ES-10-S	29(436)	24(610)	24(610)	38(965)	57-1/2(1416)	41-1/4(1048)	515/230	64
MCO-ES-20-S	29(436)	24(610)	24(610)	38(965)	70-1/2(1791)**	41-1/4(1048)	1030/465	128
MCO-ED-10-S	29(436)	24(610)	28(711)	38(965)	57-1/2(1416)	44-1/2(1130)	545/245	64
MCO-ED-20-S	29(436)	24(610)	28(711)	38(965)	70-1/2(1791)**	44-1/2(1130)	1090/490	128

** Height with or without standard casters. Height with low profile casters (double deck) is 68-1/2" (1740mm).

Model*	Total kW	Nominal Amperes Per Line (includes 3/4 HP fan motor)										
		208v/1Ph	240V/1Ph	208V/3Ph			240V/3Ph			460V/3Ph		
				X	Y	Z	X	Y	Z	X	Y	Z
MCO-ES-10-S	10.4	50	43	30	30	28	26	26	24	14	14	13
MCO-ED-10-S	10.4	50	43	30	30	28	26	26	24	14	14	13

*NOTE: Double deck models with suffix - "20-S" are provided with individual power supply connections

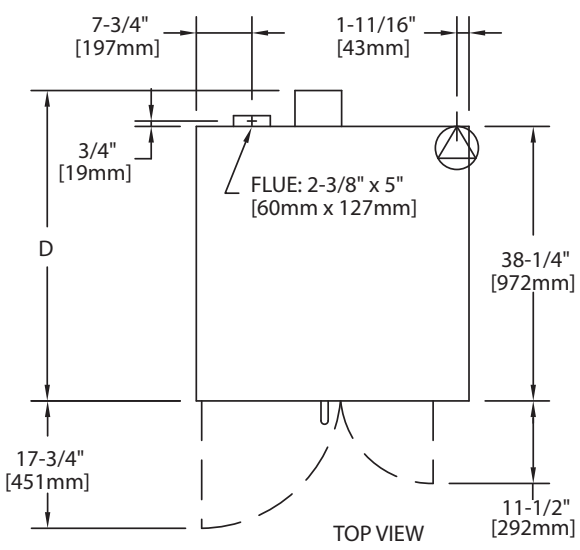

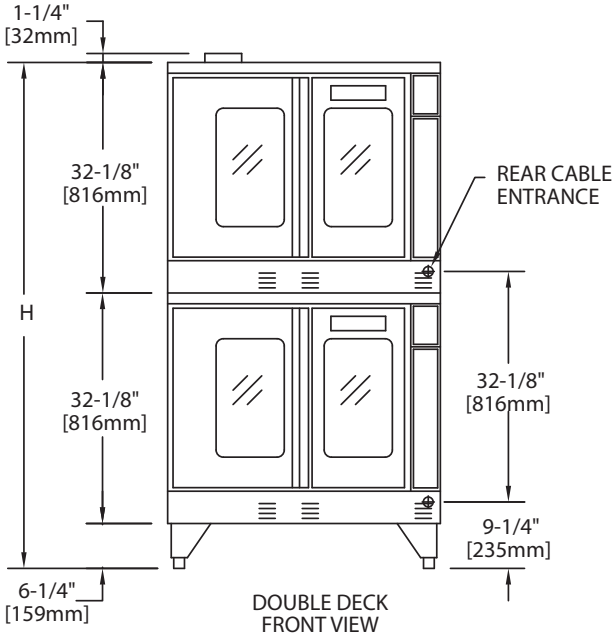

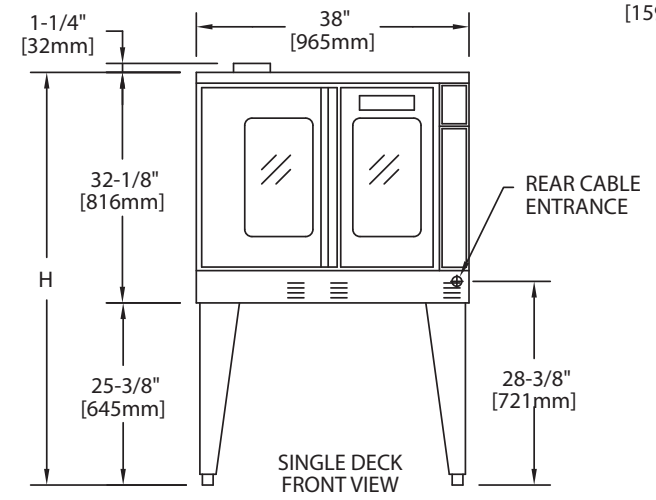

Installation Notes:			
Non-Conbustible and Combustible Wall Clearances			
Sides	*1" (25mm)	Back	6" (152mm)
***Note: Installations beside units with high heat sources it is recommended to leave 6" (152mm) on the right side of oven. Refer to the installation manual for more detail**			
Entry Clearance			
Crated		Uncrated	
44-1/2" (1130mm)		32-1/2" (862mm)	

Electrical specifications include motor requirements. 3/4 HP, 2 speed motor: 1725/1140 rpm, (60Hz); or 440/950 rpm (50Hz).

Form# MCO-ES/ED-10/20S (04/14/15)

Garland Commercial Ranges Ltd
1177 Kamato Road,
Mississauga, Ontario
L4W 1X4 CANADA

General Inquires 1-905-624-0260
USA Sales, Parts and Service 1-800-424-2411
Canadian Sales 1-888-442-7526
Canada or USA Parts/Service 1-800-427-6668

Manitowoc