CMA-180

High Temperature
Straight or Corner Single
Rack Dishwasher

STRAIGHT MODEL

CORNER MODEL

OPTIONAL 3 DOOR MODEL AVAILABLE FOR STRAIGHT AND CORNER OPERATION

FEATURES:

- **Energy Star Qualified.**
- 60 racks / 240 covers per hour.
- Economical to operate. Uses only .82 gallons of water per cycle.
- Automatic soil purging system. Filters wash water and traps plate debris into an external tray. Tray can be easily removed for dumping contents.
- All stainless steel construction offers durable performance and years of trouble free operation.
- Built-in chemical resistant industrial 7kW (240V) heater is proven to be more durable than commercial style heaters.
- Unique spray arm system features upper and lower stainless steel wash arms with reinforced end caps. Specially designed pull-pins allow wash arms to be easily removed for cleaning.
- Top mounted control box is water tight and includes a rack counter, extended wash/delimer switch and easy to read temperature gauges.
- Auto start/stop makes operation safe and easy.
- Field convertible for a wide range of applications.
- Safety Temp feature assures 180°F sanitizing rinse every cycle.
- Single point electrical connection.
- Automatic tank fill.
- Interchangeable upper and lower arms.

Available Options:

- Exhaust Fan Time Control
- Built-in 12kW booster heater
- CMA-180 Conversion Kit Corner to Straight
- CMA-180 Conversion Kit Straight to Corner
- Alternative electrical available for export
- Stainless steel dishtables
- Dual power supply connections
- Stainless steel scrap trap
- 3 doors open
- 2 minute cycle

Top mounted control box is water tight and includes a rack counter, extended wash/delimer switch and easy to read temperature gauges.

External scrap tray maintains clean wash water and prevents debris from clogging the drain.

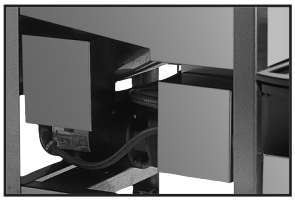

Industrial wash tank and optional booster heaters are designed for years of trouble free service.

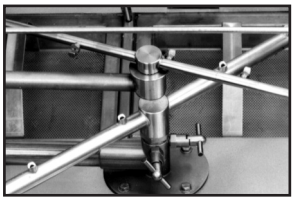

Unique pull-pin design allows wash arms to be easily removed for cleaning.

CMA Energy MIZER® Registered Trademark

NSF · c UL us LISTED COMMERCIAL DISHWASHER 864T · ENERGY STAR · ENERGY STAR PARTNER

CMA Dishmachines 12700 Knott Street Garden Grove, CA 92841• 800-854-6417 • 714-898-8781 • Fax: 714-895-2141 • www.cmadishmachines.com

CMA reserves the right to modify specifications or discontinue models without prior notification.

Printed in the U.S.A.

© 2014 CMA, Inc.

CMA-180

High Temperature
Straight or Corner Single
Rack Dishwasher

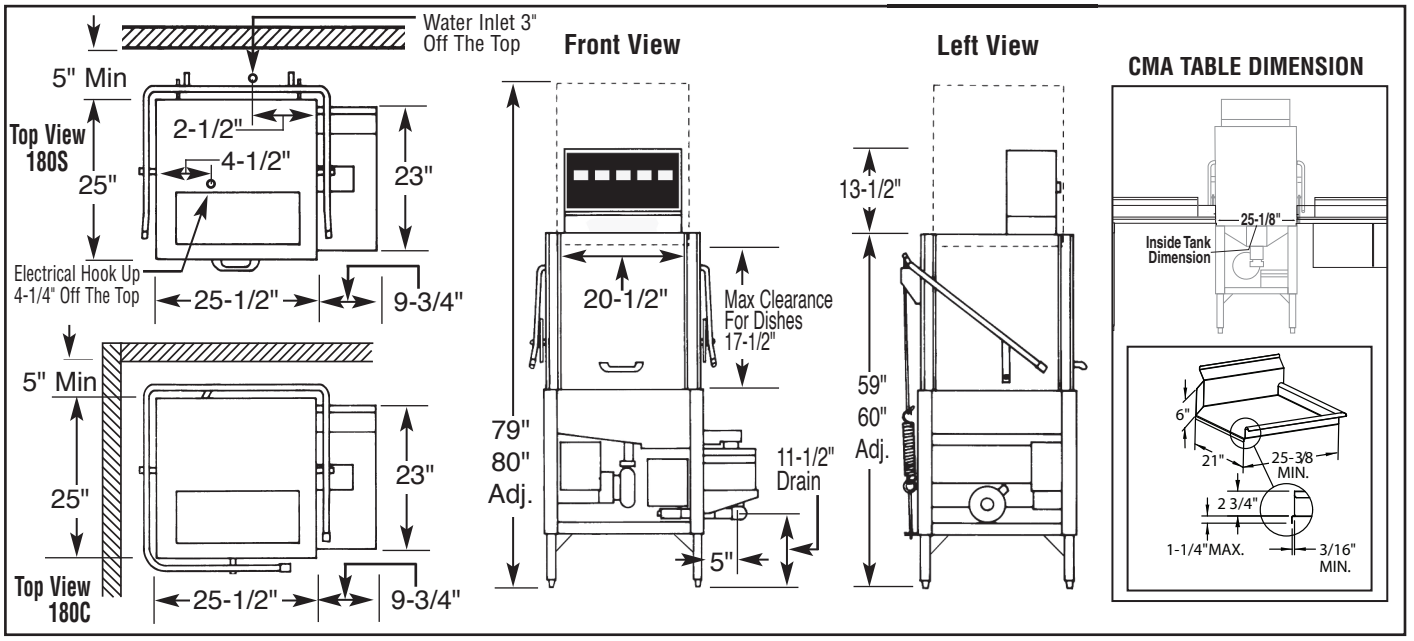

Specifications:

MODEL CMA-180	USA	METRIC
WATER CONSUMPTION		
PER RACK	.82 GAL	(3.1 L)
PER HOUR	47 GAL	(177 L)
OPERATING CYCLE		
WASH TIME - SEC.	42	42
RINSE TIME - SEC.	12	12
DWELL TIME - SEC.	4	4
TOTAL CYCLE	58	58
OPERATING CAPACITY		
RACKS PER HOUR	60	60
WASH TANK CAPACITY	8 GAL.	(30.3 L)
PUMP CAPACITY	52 GPM	(197 LPM)
WATER REQUIREMENTS		
WITHOUT BOOSTER HEATER	180°F	(82°C)
WITH BOOSTER HEATER	120°F -140°F	(49°C - 60°C
WATER INLET	3/4"	(1.9cm)
DRAIN CONNECTION	2"	(5.1cm)
RINSE PRESSURE SET	20 ±5psi	(1.41 kg/cm²)
OPERATING TEMPERATURE		
WASH-ºF (MIN)	155°F-160°F	(68°C-71°C)
RINSE-ºF (MIN)	180°F-195°F	(82°C-90°C)

		USA	METRIC
WASH PUMP MOTOR HP		1	1
DIMENSIONS			
DEPTH		25"	(63.5cm)
WIDTH (OUTSIDE DIMENSION)		25 -1/2"	(65cm)
HEIGHT		59"-60"	(150-152cm)
STANDARD TABLE HEIGHT		34"	(86.3cm)
MAX CLEARANCE FOR DISHES		17-1/2"	(44cm)
DRAIN CONNECTION (OFF FLOOR)		11-1/2"-12-1/2"	(29-32cm)
STANDARD DISHRACK		1	1
DIMENSIONS		19-3/4" X 19-3/4"	(50X50cm)
ELECTRICAL RATING	**VOLTS**	**PHASE**	**AMPS**
WITHOUT BOOSTER	208	1	36
	240	1	38
	208	3	24
	240	3	26
	480	3	10
WITH BOOSTER	208	1	78
	240	1	88
	208	3	49
	240	3	55
	480	3	25
APPROXIMATE SHIPPING WEIGHT			
WITHOUT BOOSTER		338#	(151kg)
WITH BOOSTER		351#	(170kg)

WARNING: Plumbing connections must be made by a qualified service company who will comply with all available Federal, State, and Local Health, Plumbing and Safety codes.

Summary Specifications: Model CMA-180

The model CMA-180 single tank, high temperature dishwasher is designed for years of trouble free service, producing sparkling results while conserving energy, water and chemicals. This machine is available with an optional "built in" booster heater, assuring a continuous supply of 180°F hot water, and is easily field convertible for either corner or straight installation. Unique soil purging system filters wash water and plate debris into an external tray. The CMA-180 is NSF, UL, CUL and CE approved. Constructed entirely of stainless steel.

Available Models

- CMA-180S Straight
- CMA-180SB Straight with booster
- CMA-180C Corner
- CMA-180CB Corner with booster

CMA Energy Mizer® Registered Trademark

NSF

c UL us LISTED COMMERCIAL DISHWASHER 864T

ENERGY STAR

ENERGY STAR PARTNER

CMA Dishmachines 12700 Knott Street Garden Grove, CA 92841 •800-854-6417 • 714-898-8781 • Fax: 714-895-2141 • www.cmadishmachines.com

CMA reserves the right to modify specifications or discontinue models without prior notification.

Printed in the U.S.A.

© 2014 CMA, Inc.