Symphony Plus™ ice and water dispenser

25 & 50 FB series freestanding with Chewblet® ice machine

agion® ANTIMICROBIAL PRODUCT PROTECTION

Removable ice machine for easy service

Ice and water dispensers, 115 V/60 Hz			
Ice storage capacity	Dispense	Ice machine cooling	**Item number**
25 lb (11.4 kg)	Lever	air	**25FB425A-L**
		water	**25FB425W-L**
	SensorSAFE	air	**25FB425A-S**
		water	**25FB425W-S**
50 lb (22.7 kg)	Lever	air	**50FB425A-L**
		water	**50FB425W-L**
	SensorSAFE	air	**50FB425A-S**
		water	**50FB425W-S**

Ice production		
Temperatures air/water	**70/50 F (21/10 C)**	**90/70 F (32/21 C)**
Air-cooled	425 lb (193.0 kg)	325 lb (147.6 kg)
Water-cooled	486 lb (220.6 kg)	408 lb (185.2 kg)
Energy consumption per 100 lb (45.4 kg) ice	N/A	6.0 kWh air-cooled 4.3 kWh water-cooled
Condenser water consumption	N/A	0.5 gpm (1.9 Lpm) at 70 F (21 C) water
Water consumption	12.0 gal (45.4 L) of potable water per 100 lb (45.4 kg) of ice	

Job

Item

Features

25 or 50 lb (11.4 or 22.7 kg) ice storage capacity

Removable air- or water-cooled ice machine with up to 425 lb (193.0 kg) daily production of Chewblet ice

- soft, chewable, compressed nugget ice is preferred over cubes[1] and is ideal for patient care
- Quiet Night™ sleep mode turns off ice machine when idle

Designed with sanitation in mind

- automatic self-flushing of ice machine removes impurities
- drain cup provides internal air gap for added protection of food zone components from drain line contaminants
- Agion® silver-based antimicrobial provides protection of key ice and water contact components[2]
- one-hand lever or SensorSAFE™ infrared ice dispense

Dependable design, easy to service and clean

- cleaning and sanitizing of entire machine takes only 1 hour
- LED control board provides at-a-glance machine status
- panels are easily removed for accessibility to all components
- ice machine parts are common across all Symphony Plus dispensers
- stainless steel evaporator and auger deliver long life

Environmentally responsible

- meets Consortium for Energy Efficiency Tier 2 specifications
- R404a refrigerant has zero ozone depletion potential
- continuous ice making process uses less electricity

Durable, attractive dispenser

- stainless steel cabinet with accent trim
- poly drain pan, grille and dispenser lid are corrosion-resistant
- secured top lid

Easy installation

- comes fully assembled and installs with three easy connections – electric, water and drain

Warranty

- 3 years parts and labor, 5 years compressor parts

Accessories

Chilled water option (item# 01065168)

Pressurized water sanitizing kits (refer to form# 6830)

SafeCLEAN Plus™ ice machine cleaner, 1 x 8 oz (237 ml) bottle (item# 01147826)

Nu-Calgon® IMS-III sanitizer, 16 oz (0.5 L) bottle (item# 00979674)

Additional filters (refer to form# 9905)

Additional Symphony Plus accessories (refer to price list)

801 Church Lane | Easton, PA 18040, USA
1.800.523.9361 | 1.610.252.7301 | follettice.com

FOLLETT®

Specification

Ice storage capacity	25 Series – 25 lb (11.4 kg) 50 Series – 50 lb (22.7 kg)
W1 Width, top	21.00" (53.3 cm)
W2 Width, bottom	22.75" (57.8 cm)
D1 Depth, top	23.75" (60.3 cm)
D2 Depth, drain pan	7.00" (17.8 cm)
D3 Depth, bottom	24.75" (62.9 cm)
H1 Height	25 Series – 62.88" (159.7 cm) 50 Series – 66.88" (169.9 cm)
H2 Dispense height clearance	7.62" (19.4 cm)
Ventilation clearance	air-cooled models only – 4.00" (10.16 cm) rear
Service clearance	12.00" (30.5 cm) top
C1 115 V/60/1 electrical	11 amps, 0.8 kW 7' (2.1 m) cord, NEMA 5-15 90º hospital-grade plug
C2 Potable water inlet	3/8" FPT
C3 Drain dispenser	3/4" MPT
C4 Drain, ice machine	3/4" MPT
Water-cooled model connections **C5** condenser inlet **C6** condenser drain	 3/8" FPT 3/8" FPT
Air temperature	50 -100 F (10 - 38 C)
Water temperature	45 - 90 F (7 - 32 C)
Potable water pressure	10 - 70 psi (69 - 483 kpa)
Condenser water pressure	10 - 125 psi (69 - 861 kpa)
Heat rejection	air-cooled models – 5000 BTU/hr water-cooled models – 1400 BTU/hr to air, 3600 BTU/hr to water
Water flow requirement for water-cooled models	0.25 gpm (0.95 lpm) at 50 F (10 C) 0.5 gpm (1.90 lpm) at 70 F (21 C) 1.25 gpm (4.73 lpm) at 90 F (32 C)
Approximate net weight	212 lb (96 kg)
Approximate ship weight	230 lb (105 kg)

NOTE: For indoor use only

SHORT FORM SPECIFICATION: Ice and water dispenser to be Follett® automatic load in freestanding configuration, with ___ 25 lb (11.4 kg) or ___ 50 lb (22.7 kg) of storage, water station and (choose one) ___ air- or ___ water-cooled ice machine in base. Environmentally responsible R404a ice machine mounted in base and to be removable as one unit for cleaning and maintenance. Ice machine to produce approximately 425 lb (193.0 kg) per day of Chewblet compressed nugget ice at air temp. of 70 F (21 C), water temp. of 50 F (10 C). Ice machine equipped with automatic self-flushing and Quiet Night sleep mode. Dispenser to have automatic bin level control to start and stop ice machine and separate circuitry to allow dispensing to continue with ice machine removed. Dispenser equipped with 6.00" (15.24 cm) adjustable legs, flanged feet. Storage area insulated with non-CFC, high density, foamed-in-place polyurethane. 7' (2.1 m) cord and NEMA 5-15 90º hospital-grade plug provided. NSF and ETL listed.

Dimensional drawing

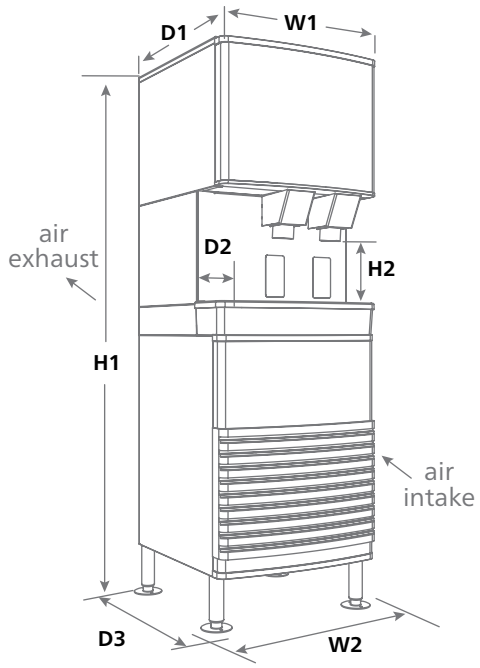

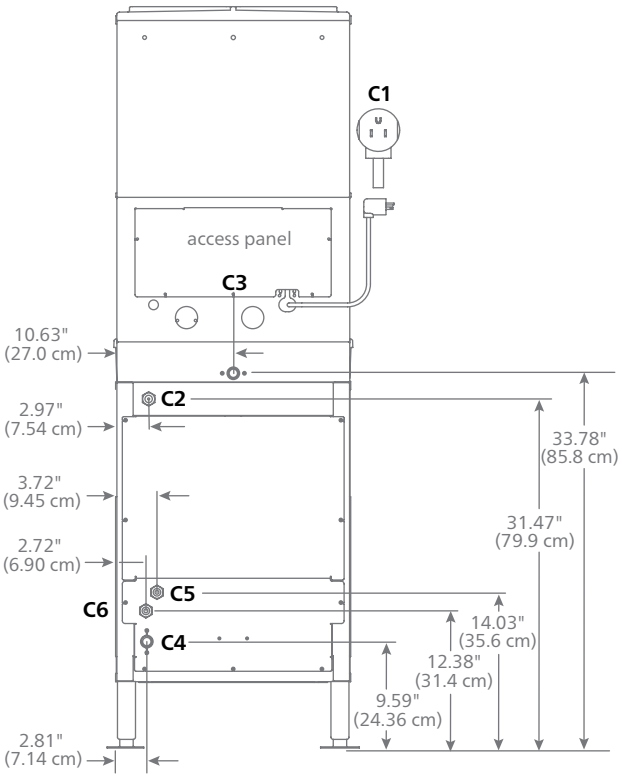

Measurements shown are with base stand legs at lowest position.

[1] Independent third party studies. Contact Follett for details.

[2] Disclaimer: Antimicrobial protection is limited to the treated components and does not treat water or ice.

Agion is a registered trademark of Sciessent LLC.
Calgon is a licensed tradename distributed by Nu-Calgon, in the United States.
Symphony Plus, SensorSAFE, SafeCLEAN Plus and Quiet Night are trademarks of Follett LLC.
Chewblet and Follett are registered trademarks of Follett LLC, registered in the US.
Follett reserves the right to change specifications at any time without obligation. Certifications may vary depending on country of origin.

Form #6650 04/18
© Follett LLC

801 Church Lane | Easton, PA 18040, USA
1.800.523.9361 | 1.610.252.7301 | follettice.com