Single door Ice•DevIce™ ice storage and dispensing systems

DEV Series

Easy to clean corrosion-resistant ABS/poly tops!
Lifetime cabinet and liner warranty!

Model DEV1010SG-48 with SmartCART 75 ice cart

Easy, safe to use!

No motors or augers

A better way to remove and transport ice!

Ice flows smoothly through chute into Totes ice carrier when chute door is opened

Elevated, chuted ice storage bin and cart systems use gravity to load ice into cart. System provides exceptional labor-savings, sanitation and safety for foodservice operations using cube and Chewblet® ice. (Not recommended for flake ice.)

Each model includes full stainless exterior bin and base, corrosion-resistant ABS/poly top cut for specified icemaker, rotomolded polyethylene SmartCART™ ice cart with 3 poly Totes™ ice carriers on a SmartCART 75, 82 oz plastic ice scoop, probe and rake tool set. Refer to chart on reverse for other configurations.

Wide range of sizes to meet varied needs

- Widths from 30" to 60" (762 to 1524 mm) and capacities from 460 to 1650 lbs (209 to 748 kg)

Labor-saving ice removal

- Ice flows smoothly through chute into a Totes ice carrier when chute door is opened
- Eliminates need to shovel or scoop ice from bin
- Reduces ice removal time by up to 75%

Faster, safer ice transport

- Slim, 21.5" (547 mm) wide cart safely moves 75 lbs (34 kg) of ice through narrow aisles (other cart options available)
- Oversized back wheels allow easy rolling over safety mats and uneven floors

Safe, sanitary, easy ice distribution

- Rugged poly Totes ice carriers limit lifted weight to 25 lbs (11 kg) for safer ice delivery
- Rectangular design facilitates transfer into beverage dispensers, wait stations and ice wells
- Dedicated-use Totes ice carriers deliver more sanitary ice
- Hinged lid on cart protects ice during transport

Convenient, safer SmartGATE® ice shield

- First ice in is first ice out
- Provides positive control of ice flow into access door area
- Slots allow safer breaking of ice bridges through gate, reducing spillage
- Locks open in 3 positions
- Returns easily to full down position even when bin is full

Durable polyethylene lift doors with PowerHinge™ door hinge

- Doors stay safely open – no door catches
- No sharp corners to injure workers
- Molded-in gasket never needs to be replaced
- Easy one-hand open and close

Non-corroding poly liners, top and trim

- Eliminates pitting, corrosion, staining from released chlorine
- Makes cleaning easy

Optional Accessories

- Additional cart and Totes ice carrier (refer to form# 3435)
- Drain pan (required for some Vogt icemakers; consult factory)
- Flexi-Tops™ ice bin top system for 48" (1220 mm) and 60" (1524 mm) wide models (refer to form# 4025)

FOLLETT®
Innovative solutions, inspired by ice

801 Church Lane • Easton, PA 18040,USA
Toll free (800) 523-9361 • +1 (610) 252-7301
Fax +1 (610) 250-0696 • www.follettice.com

KaTom Restaurant Supply, Inc.

Single door Ice•DevIce™ ice storage and dispensing systems

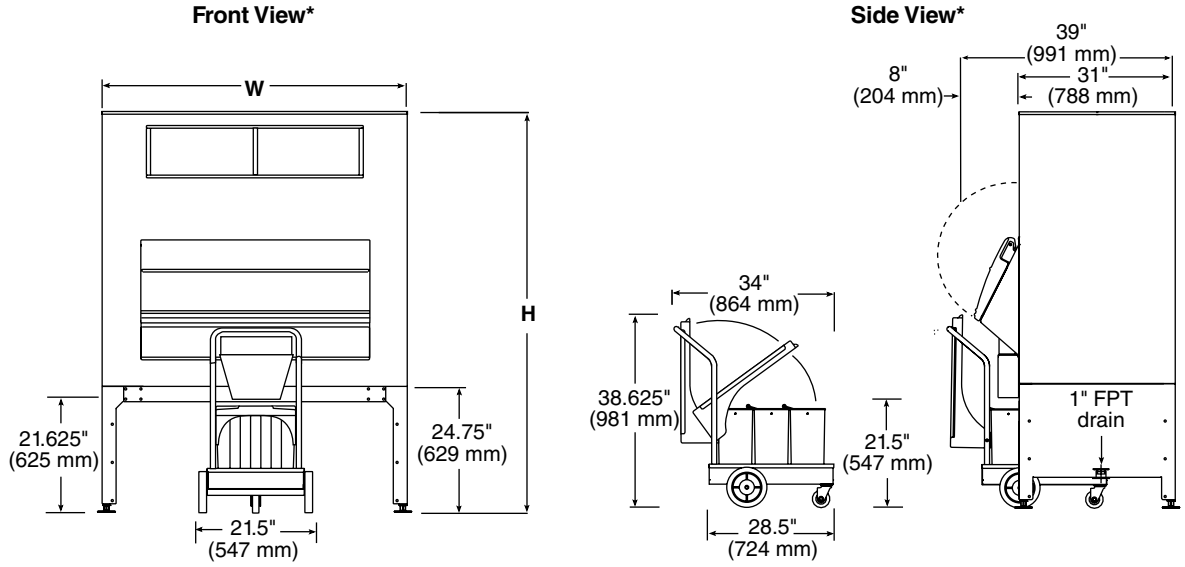

U.S. Patent 5,797,514 & 5,887,758

* Shown with SmartCART 75 ice cart

General Notes

Follett® recommends installation of a floor drain with grate with all ice storage bins. Consider cart positioning when locating the drain.

Clearance required to pull cart from below bin — minimum 26" (661 mm), optimal 40" (1016 mm).

Model Number	with SC75 Cart	with SC125 Cart	with Cambro Cart	Cubic Volume cu ft (m)	Max. Bin Capacity lb (kg)[1]	Width in (mm)	Height in (mm)[2,3]	Req'd Door Access in (mm)[4]	Approx. Ship Weight lb (kg)[5]
DEV500SG-30	-75	-125	-ICS125L	14.8 (0.41)	460 (209)	30 (762)	63.0 (1600)	31 (788)	299 (136)
DEV700SG-30	-75	-125	-ICS125L	21.7 (0.61)	680 (308)	30 (762)	78.5 (1993)	31 (788)	321 (146)
DEV860SG-48	-75	-125	-ICS125L	19.7 (0.56)	860 (391)	48 (1220)	65.5 (1664)	32 (813)	399 (181)
DEV1010SG-48	-75	-125	-ICS125L	31.9 (0.90)	1000 (454)	48 (1220)	74.5 (1893)	32 (813)	400 (182)
DEV1175SG-48	-75	-125	-ICS125L	37.6 (1.06)	1185 (538)	48 (1220)	80.5 (2045)	32 (813)	539 (244)
DEV1300SG-48	-75	-125	-ICS125L	41.9 (1.19)	1320 (599)	48 (1220)	84.0 (2134)	32 (813)	480 (218)
DEV1160SG-56	-75	-125	-ICS125L	37.3 (1.06)	1170 (531)	56 (1423)	74.5 (1893)	32 (813)	553 (251)
DEV1350SG-56	-75	-125	-ICS125L	43.2 (1.22)	1360 (617)	56 (1423)	80.5 (2045)	32 (813)	553 (251)
DEV1080SG-60	-75	-125	-ICS125L	34.3 (0.97)	1080 (454)	60 (1524)	65.5 (1664)	32 (813)	417 (189)
DEV1325SG-60	-75	-125	-ICS125L	42.0 (1.19)	1325 (601)	60 (1524)	74.5 (1893)	32 (813)	585 (265)
DEV1475SG-60	-75	-125	-ICS125L	47.4 (1.34)	1490 (676)	60 (1524)	80.5 (2045)	32 (813)	605 (274)
DEV1650SG-60	-75	-125	-ICS125L	52.8 (1.50)	1660 (753)	60 (1524)	84.0 (2134)	32 (813)	524 (238)

Notes:

1 Computed on cubic volume of bin. Does not reflect cart capacity or voids that can occur due to pyramiding.

2 Special top required for icemakers weighing more than 1000 lbs (454 kg). Add 2.125" (54 mm) to height. Contact factory.

3 10" (254 mm) legs available which replace base unit, height from floor to bottom of chute equals 15.5" (394 mm). Includes one Totes ice carrier instead of cart and uses 4" (102 mm) chute. Add –LP to model number for ordering.

4 Required clearance for installation access through doors (may require removal of door assembly).

5 Add 2" (51 mm) to depth and 10 lbs (4.5 kg) to shipping weight when drain pan accessory used.

Warranty

- The cabinet exterior, including top and trim, and the interior liner will remain free of corrosion for the useful life of the product.
- Doors, inspection windows, ice gates, and all other integral components are covered against defects in material or workmanship for five years from date of installation. Installation date shall not exceed 90 days from date of shipment.
- Ice transport carts, scoops, paddles, shovels, rakes and other accessories are covered against defects in material or workmanship for two years from date of installation. Installation date shall not exceed 90 days from date of shipment.

Flexi-Top, Ice•DevIce, PowerHinge, SmartCART and Totes are trademarks of Follett Corporation.
Chewblet, Follett and SmartGATE are registered trademarks of Follett Corporation, registered in the US.
Follett reserves the right to change specifications at any time without obligation. Certifications may vary depending on country of origin.

FOLLETT®
Innovative solutions, inspired by ice

801 Church Lane • Easton, PA 18040, USA
Toll free (800) 523-9361 • +1 (610) 252-7301
Fax +1 (610) 250-0696 • www.follettice.com

© Follett Corporation
Form #9720
04/11

KaTom Restaurant Supply, Inc.