Toastmaster®

Job _____ Item No. _____

Toastmaster® Solid-State Pop-Up Toasters

4-Slot, Bread & Texas Toast ☐TP409 ☐TP424 ☐TP430

4-Slot, Hybrid- Bread & Bagel Toaster ☐HT409 ☐HT424

4-Slot, Bagel/Bun ☐BTW09 ☐BTW24

TP409

FEATURES

- Solid state timer control(s)
- Electrical, insulated ceramic etched foil heating elements provide uniform heat and even toasting
- Operating lever(s) and color selection knob(s)
- Removable crumb tray
- Welded sheet steel with brushed stainless steel
- Pullout crumb tray is provided for easy cleaning

CERTIFICATIONS

DESCRIPTION

Toastmaster solid-state pop-up toasters are designed to uniformly toast bread, frozen waffles, bagels, buns and many other foods consistently and many other foods consistently.

SPECIFICATIONS

Each toasting chamber is equipped with oven guide wires, and lowering rack. Insulated ceramic etched foil heaters are installed on both sides of each toasting chamber. Models TP409, TP424 & TP430 have four toasting slots in the top and each side is heated. Models HT409, HT424, HTC409 four slot bread toasters have four toasting slots in the top: two slots are standard (two-sided) and two slots are extra-wide one sided slots. Models BTW09, BTW24 four slot bread toaster have four toasting slots in the top. Each slot is extra wide & each chamber of the BTW is **one-sided toasting only.** All models operate on 1 phase only. Toasters are equipped with a two pole switch that energizes the elements when the operating lever is depressed. Toasters are furnished with factory installed 36" cord with NEMA plug.

WARRANTY

These units come with a one [1] year warranty for parts and labor.

CAPACITY

MODEL	DESCRIPTION	SLICE PER HOUR
TP409	BREAD TOASTER Four (4) 1-⅛" Width Slots	250
TP424	BREAD TOASTER Four (4) 1-⅛" Width Slots	300
TP430	BREAD TOASTER Four (4) 1-⅛" Width Slots	300
HT409	HYBRID - BREAD & BAGEL TOASTER Two (2) 1-⅛" Width Slots - 2-Sided Heat Two (2) 1-⅝" Width Slots - Single-Sided Heat	150/ 150
HT424	HYBRID - BREAD & BAGEL TOASTER Two (2) 1⅛" Width Slots - 2-Sided Heat - Two (2) 1-⅝" Width Slots - Single-Sided Heat	150/ 190
BTW09	BAGEL & BUN TOASTER Single-Sided Heat - Four (4) 1-⅝" Width Slots	250
BTW24	BAGEL & BUN TOASTER Single-Sided Heat - Four (4) 1-⅝" Width Slots	250

MADE IN THE USA

Toastmaster® • www.ToastmasterCorp.com
10 Sunnen Drive • Saint Louis, Missouri 63143
Telephone 314 678 6347 • Fax 314 781 5445

Printed in the U.S.A. • 2M-Z2xxxx • Rev - • 2.2017

Specifications are subject to change without notice and are not intended for installation purposes.

Toastmaster® Solid-State Pop-Up Toasters

4-Slot, Bread & Texas Toast ☐TP409 ☐TP424 ☐TP430

4-Slot, Hybrid- Bread & Bagel Toaster ☐HT409 ☐HT424

4-Slot, Bagel/Bun ☐BTW09 ☐BTW24

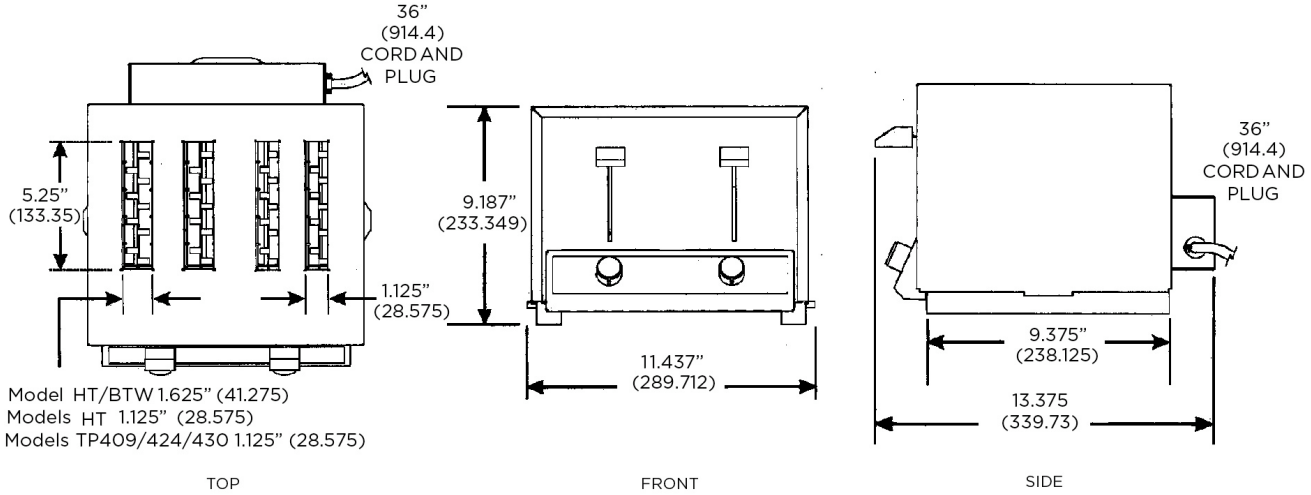

MODEL	DESCRIPTION	HEIGHT in. (mm)	WIDTH in. (mm)	DEPTH in. (mm)	VOLTS[1] 1Ø	AMPS	WATTS	NEMA PLUG	APPROX. SHIP WEIGHT
TP409	BREAD TOASTER Four (4) 1-⅛" Width Slots	9.2 (233.3)	11.4 (289.7)	13.4 (340.4)	120V	18.3	2,200	5-20P (U.S ONLY) 5-30P (U.S/CANADA)	21 lb. (9.5 kg)
TP424	BREAD TOASTER Four (4) 1-⅛" Width Slots	9.2 (233.3)	11.4 (289.7)	13.4 (340.4)	208/240	9.6/10.8	2,200/2,600	6-15P (U.S ONLY) 6-20P (U.S/CANADA)	21 lb. (9.5 kg)
TP430	BREAD TOASTER Four (4) 1-⅛" Width Slots	9.2 (233.3)	11.4 (289.7)	13.4 (340.4)	208	12.5	2,600	6-20P (U.S/CANADA)	21 lb. (9.5 kg)
HT409	HYBRID - BREAD & BAGEL TOASTER Two (2) 1-⅛" Width Slots - 2-Sided Heat Two (2) 1-⅝" Width Slots - Single-Sided Heat	9.2 (233.3)	11.4 (289.7)	13.4 (340.4)	120 120	16.6 16.6	2,000 2,000	5-20P (U.S ONLY) 5-30P (CANADA)	21 lb. (9.5 kg)
HT424	HYBRID - BREAD & BAGEL TOASTER Two (2) 1⅛" Width Slots - 2-Sided Heat - Two (2) 1-⅝" Width Slots - Single-Sided Heat	9.2 (233.3)	11.4 (289.7)	13.4 (340.4)	208/240	8.0/9.2	1.700/2.200	6-15P (U.S/CANADA)	21 lb. (9.5 kg)
BTW09	BAGEL & BUN TOASTER Single-Sided Heat - Four (4) 1-⅝" Width Slots	9.2 (233.3)	11.4 (289.7)	13.4 (340.4)	120	15.0	1,800	5-20P (U.S/CANADA)	21 lb. (9.5 kg)
BTW24	BAGEL & BUN TOASTER Single-Sided Heat - Four (4) 1-⅝" Width Slots	9.2 (233.3)	11.4 (289.7)	13.4 (340.4)	208/240	7.7/7.5	1,600/1,800	6-15-P (U.S/CANADA)	21 lb. (9.5 kg)

[1] Specify 120V, 208V or 208/240V Service and Canadian applications when ordering

NEMA 5-20P

NEMA 5-30P

NEMA 5-15P

NEMA 6-15P

NEMA 6-20P

Due to periodic changes in designs, methods, procedures, policies and regulations, the specifications contained in this sheet are subject to change without notice. While Star Manufacturing exercises good faith efforts to provide information that is accurate, we are not responsible for errors or omissions in information provided or conclusions reached as a result of using the specifications. By using the information provided, the user assumes all risks in connection with such use.

Toastmaster® • www.ToastmasterCorp.com
10 Sunnen Drive • Saint Louis, Missouri 63143
Telephone 314 678 6347 • Fax 314 781 5445

Printed in the U.S.A. • 2M-Z2xxxx • Rev - • 2.2017

Please refer to the owner's manual for information regarding installation or use.