Centaur®

Model# CGR-24/ CGR24-T
CGR-36/ CGR36-T
CGR-48/ CGR48-T

PROJECT NAME: _____ LOCATION: _____

ITEM: _____ MODEL: _____

Commercial Gas Griddle Manual & Thermostat

The Centaur Gas Counter Griddle is available in both Manual or Thermostatic Control.

The efficient ¾" griddle plate offers the thickness of even heat distribution. The Centaur “quick on” burners keep the heat even by adjusting the burners when the probes sense a drop in temperature. This gives you quick temperature recovery when cooking. The result is faster cook times, greater moisture retention, higher product yield — you serve a higher quality, moist product.

It is available in 24”, 36”, and large 48” widths and have a 1-year parts and labor warranty. Units are shipped for natural gas but are easily converted to LP (propane) gas with the LP conversion kit that is included.

All Griddles carry ETL gas and sanitation approvals that pass US gas and sanitation requirements for use in restaurants.

Intertek Intertek

FEATURES LIST

CGR-24/ CGR-24-T, CGR-36/ CGR-36-T

CGR-48/ CGR-48-T

- High Performance and Efficient 30,000 BTU Stainless Steel U-style burners provide flame every 6” on the griddle surface
- ¾” Highly Polished griddle plate providing even heat distribution
- Thick 4” High Backsplash and Sidesplash fully welded to the griddle
- Double wall construction with insulated side panels
- Extended cool to touch front edge
- Thermostatic Griddle available with 200 °F to 450 °F temperature range
- Wide 3 ¼” front grease trough
- Removable, easy to clean stainless steel grease catch pan
- Large temperature knobs with set screws
- Pilots with front access
- Adjustable non-skid Stainless Steel legs
- 1 year parts and labor

Specifications subject to change without notice

Model# **CGR-24/ CGR24-T**
CGR-36/ CGR36-T
CGR-48/ CGR48-T

PLAN VIEW

- A pressure regulator is provided with this unit.
  Natural Gas 4.0” W.C.
  Propane Gas 10.0” W.C.
- Gas connection is ¾” NPT (19mm) rear gas connection.
- All equipment is supplied for Natural Gas, an LP conversion kit is also provided.

All Manual Units

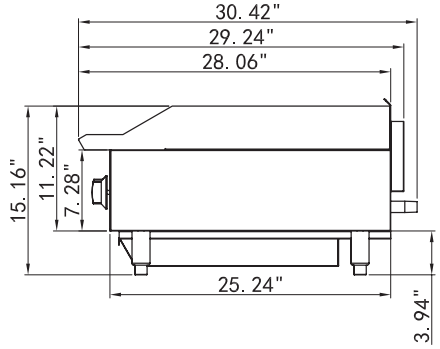

CGR-24/ CGR-24-T

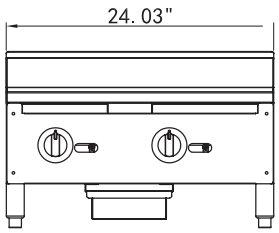

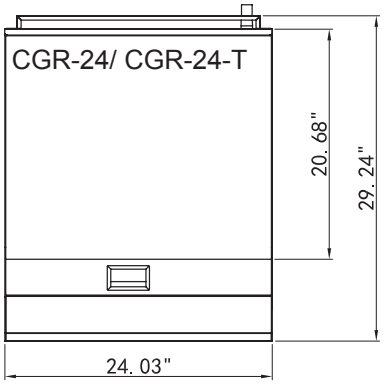

All Thermostatic Units

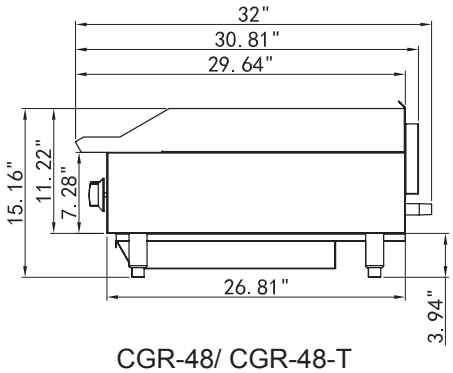

CGR-36/ CGR-36-T

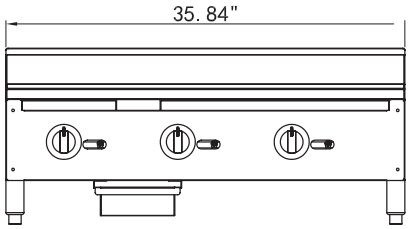

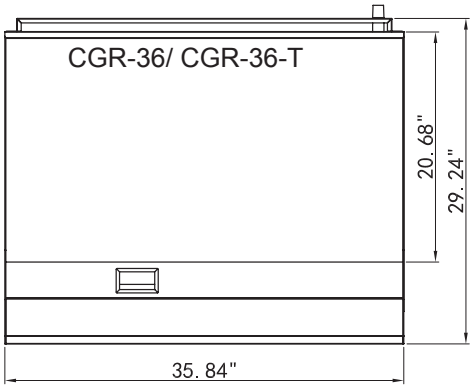

CGR-48/ CGR-48-T

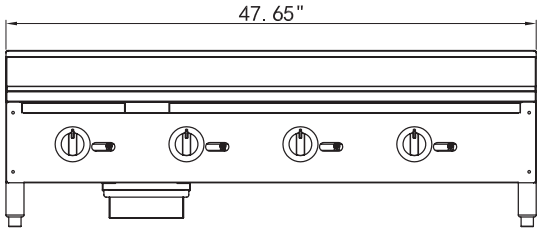

Natural Gas 4.0” (102 mm) W.C.
Propane Gas 10.0” (279 mm) W.C.

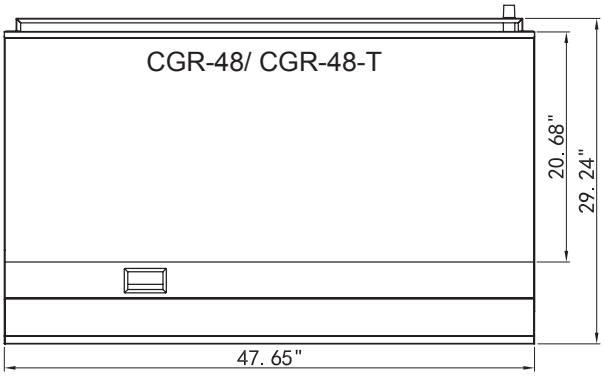

	Model	Burners	Cooking Area		Plate Thickness	Dimensions			BTU’s (per burner)	Total BTU’s	Crated Weight (lbs)
			L	W		W	D	H			
Manual Units	CGR-24	2	20.68	23.97	3/4"	24.03	29.24	15.16	30,000	60,000	198
	CGR-36	3	20.68	35.78	3/4”	35.84	29.24	15.16	30,000	90,000	274
	CGR-48	4	20.68	47.59	3/4”	47.65	29.24	15.16	30,000	120,000	352
Thermostatic Units	CGR-24-T	2	20.68	23.97	3/4”	24.03	29.24	15.16	30,000	60,000	198
	CGR-36-T	3	20.68	35.78	3/4”	35.84	29.24	15.16	30,000	90,000	274
	CGR-48-T	4	20.68	47.59	3/4”	47.65	29.24	15.16	30,000	120,000	352